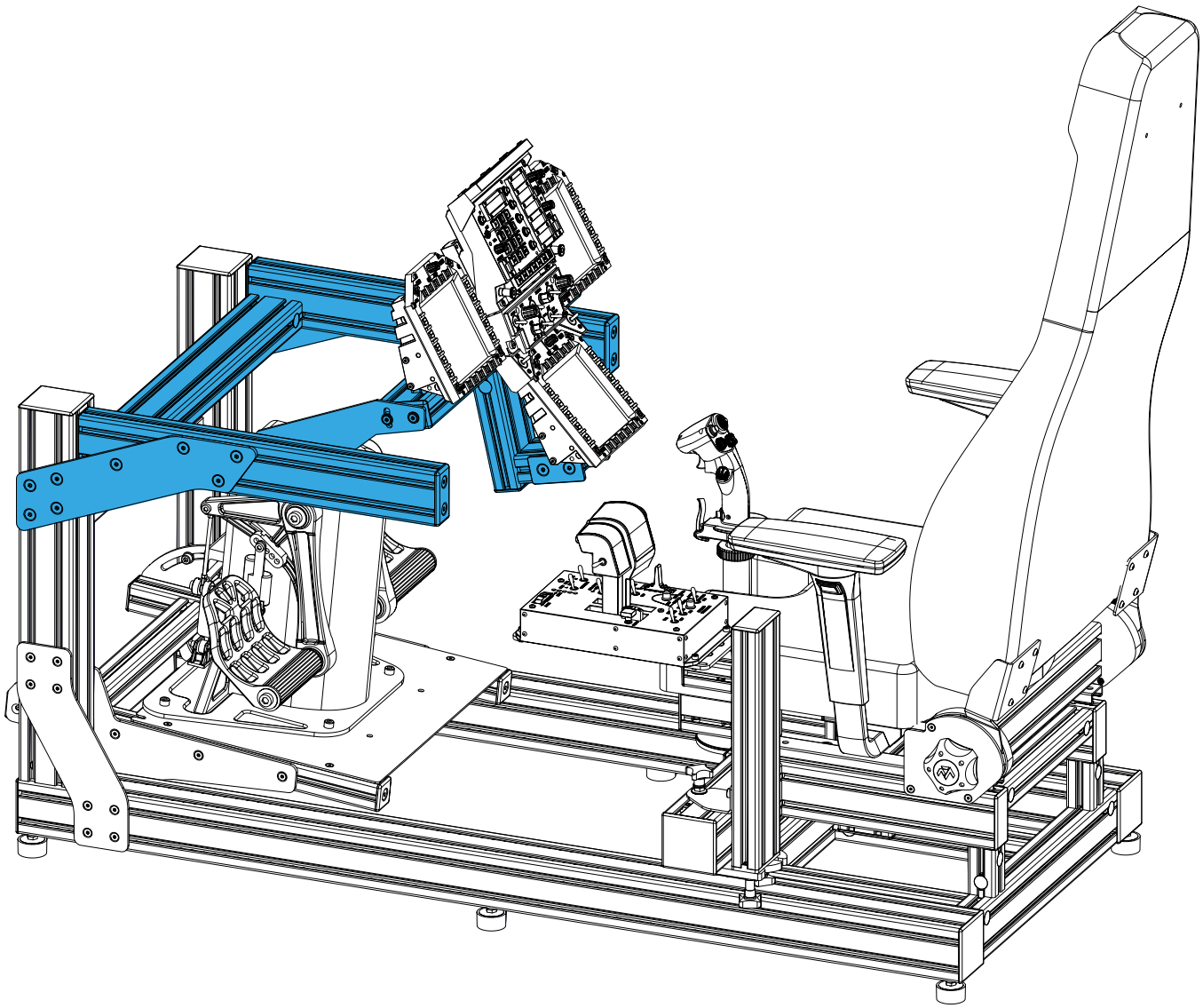

MTS WINWING MIP

Instruction Manual
Bedienungsanleitung
Mode d'emploi

PARTS

[dimensions in mm / different scales]
No extra or spare parts listed!

1x

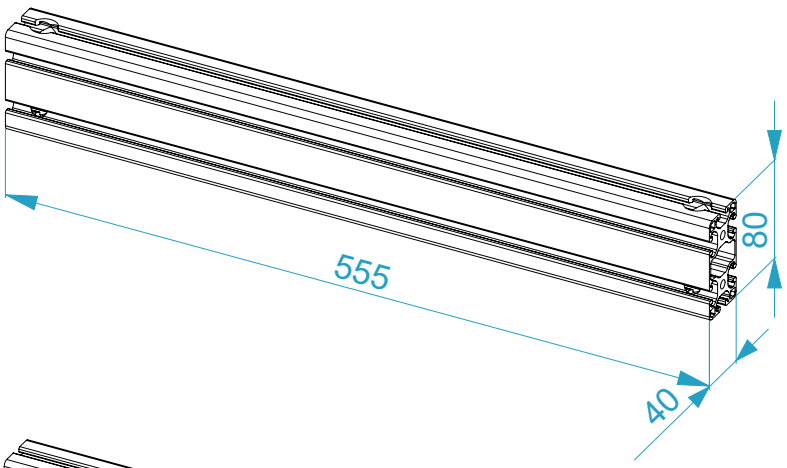

2x

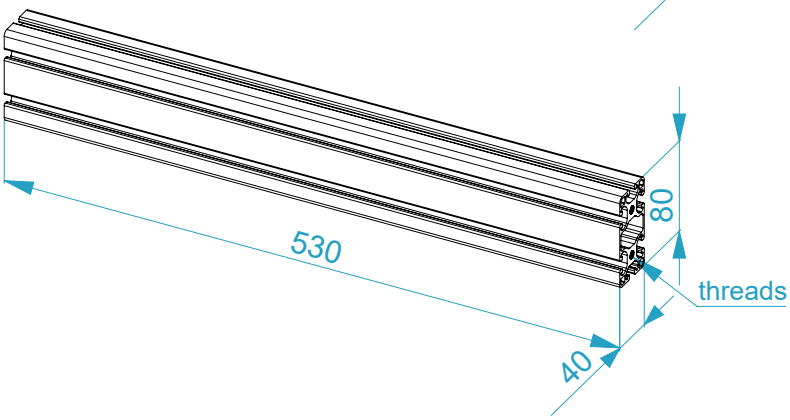

1x

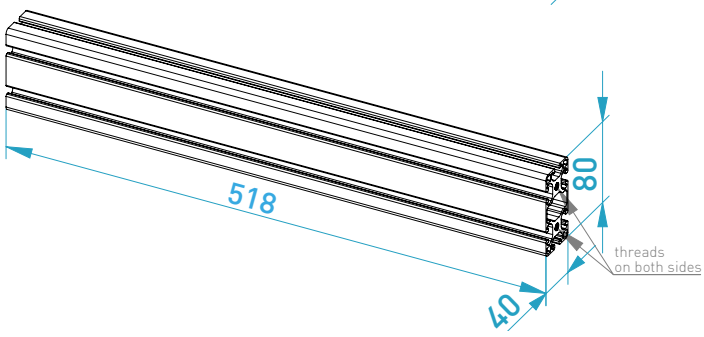

1x

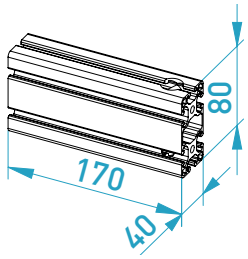

1x

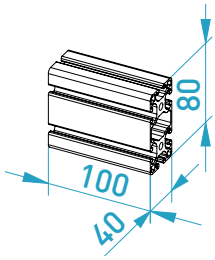

3x

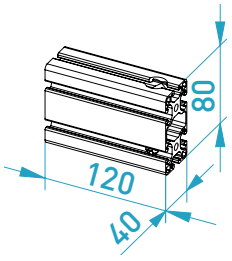

1x

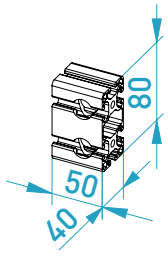

1x

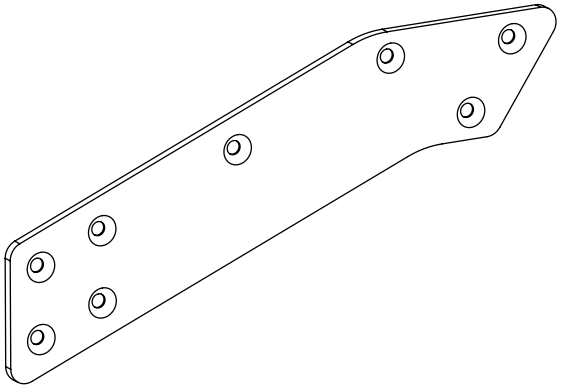

1x

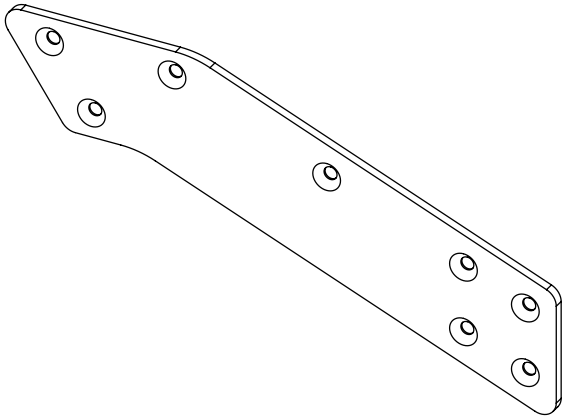

2x

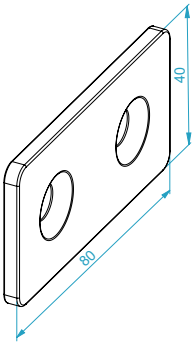

9x

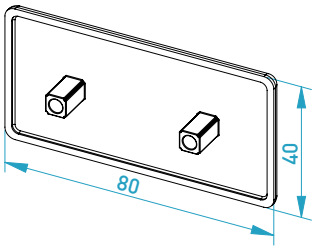

2x

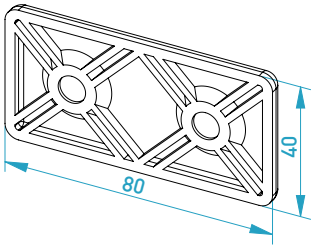

14x

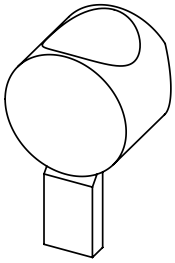

14x

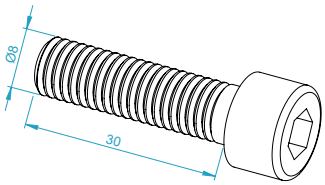

4x

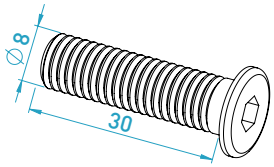

black

4x

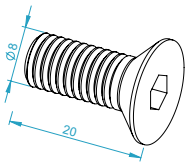

black

20x

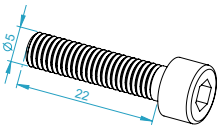

4x

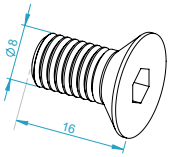

black

30x

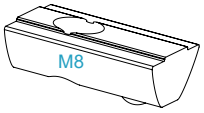

18x

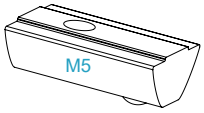

20x

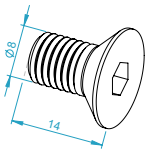

black

4x

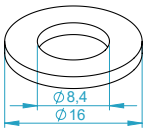

black

20x

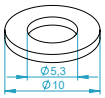

PRE-ASSEMBLED

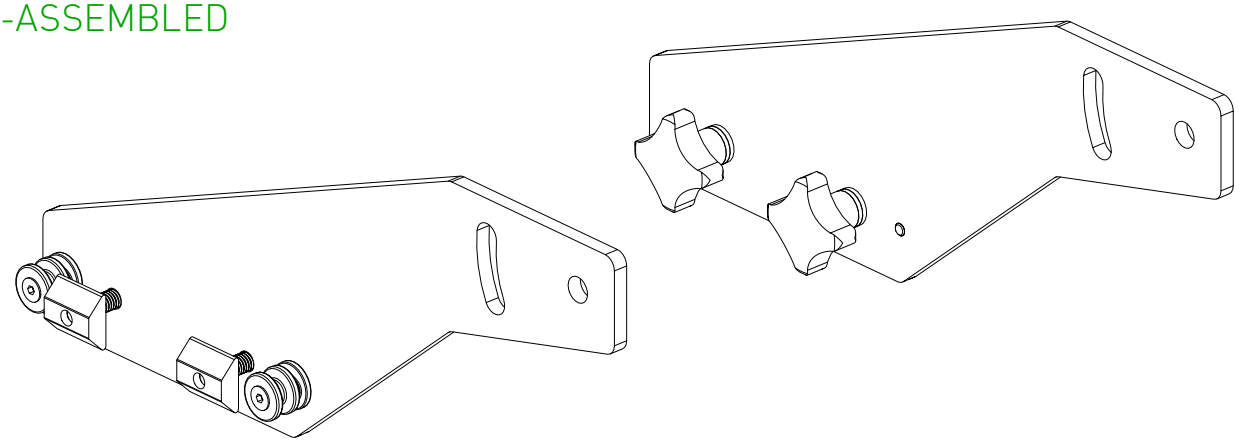

with this parts:

2x

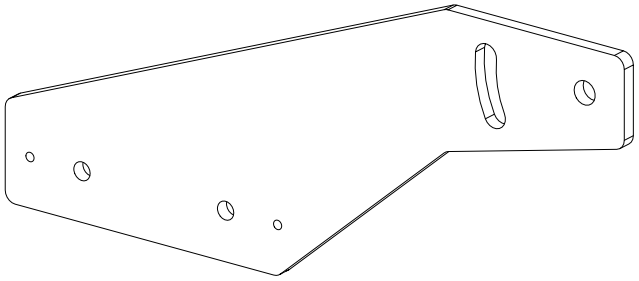

4x

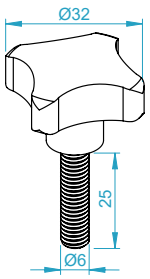

8x

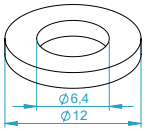

4x

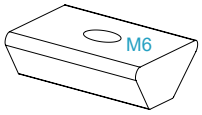

4x

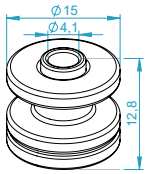

4x

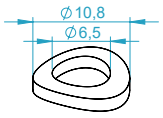

4x

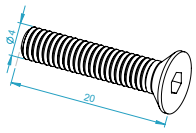

ASSEMBLY

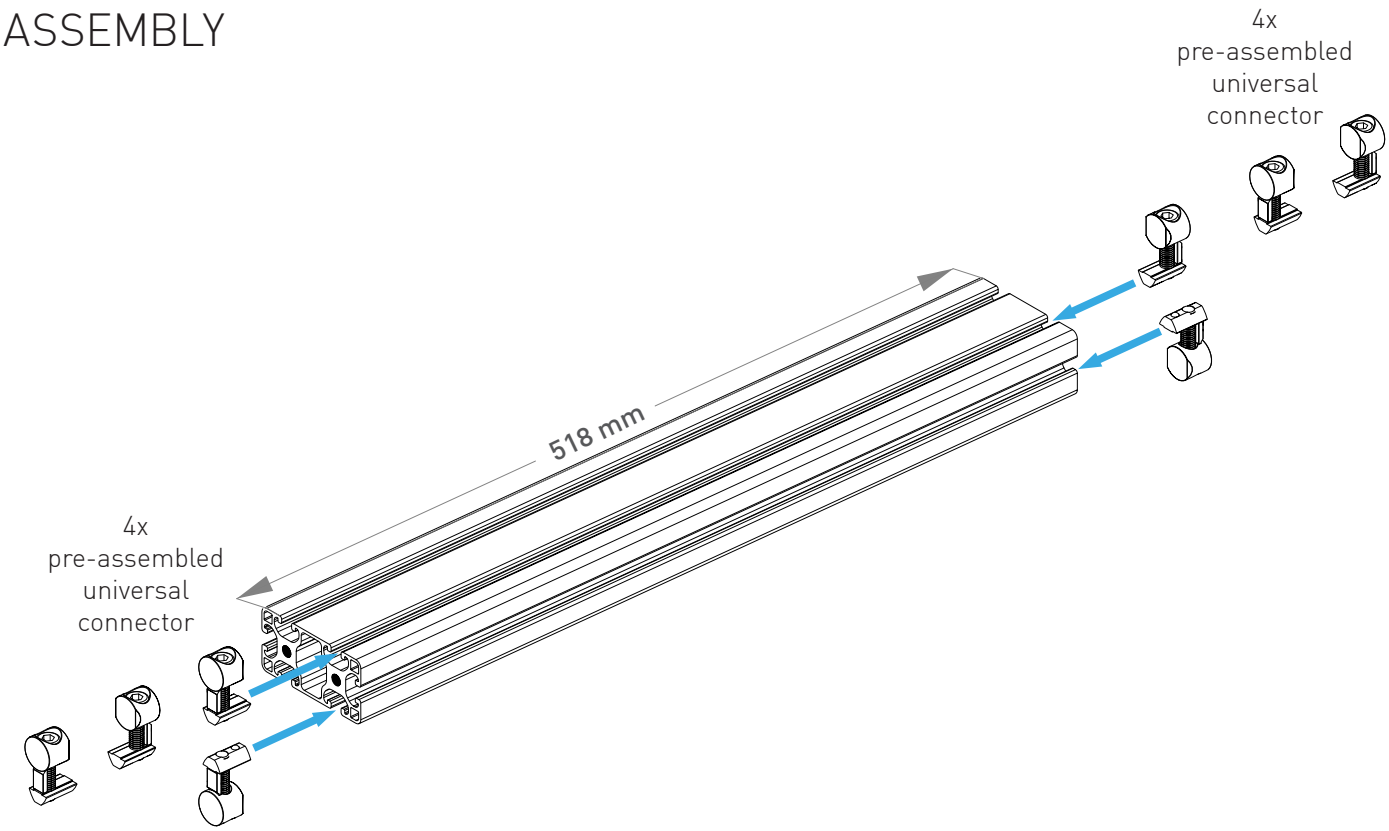
4x
pre-assembled
universal
connector
518 mm
4x
pre-assembled
universal
connector

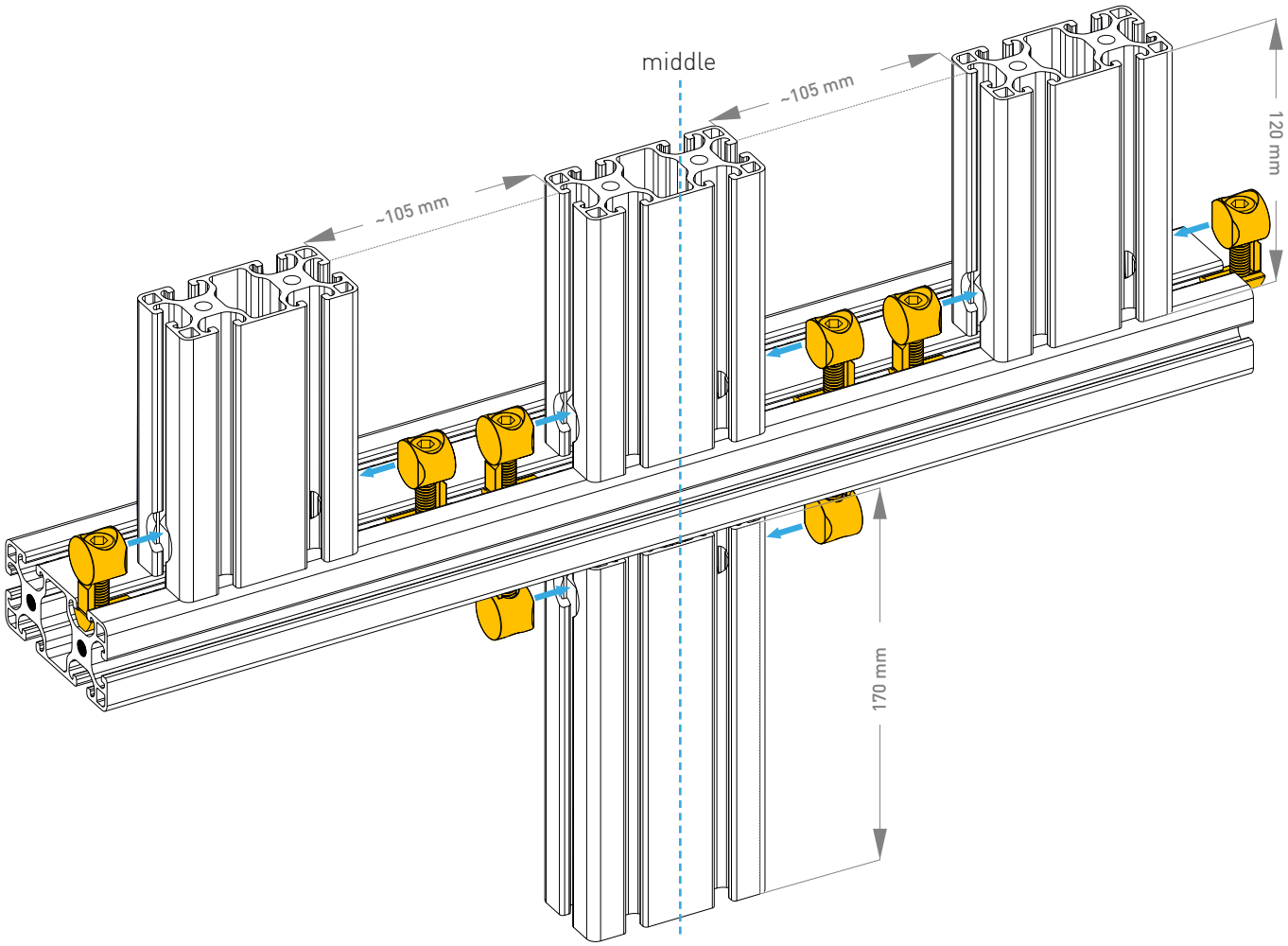
middle
~105 mm
~105 mm
120 mm
170 mm

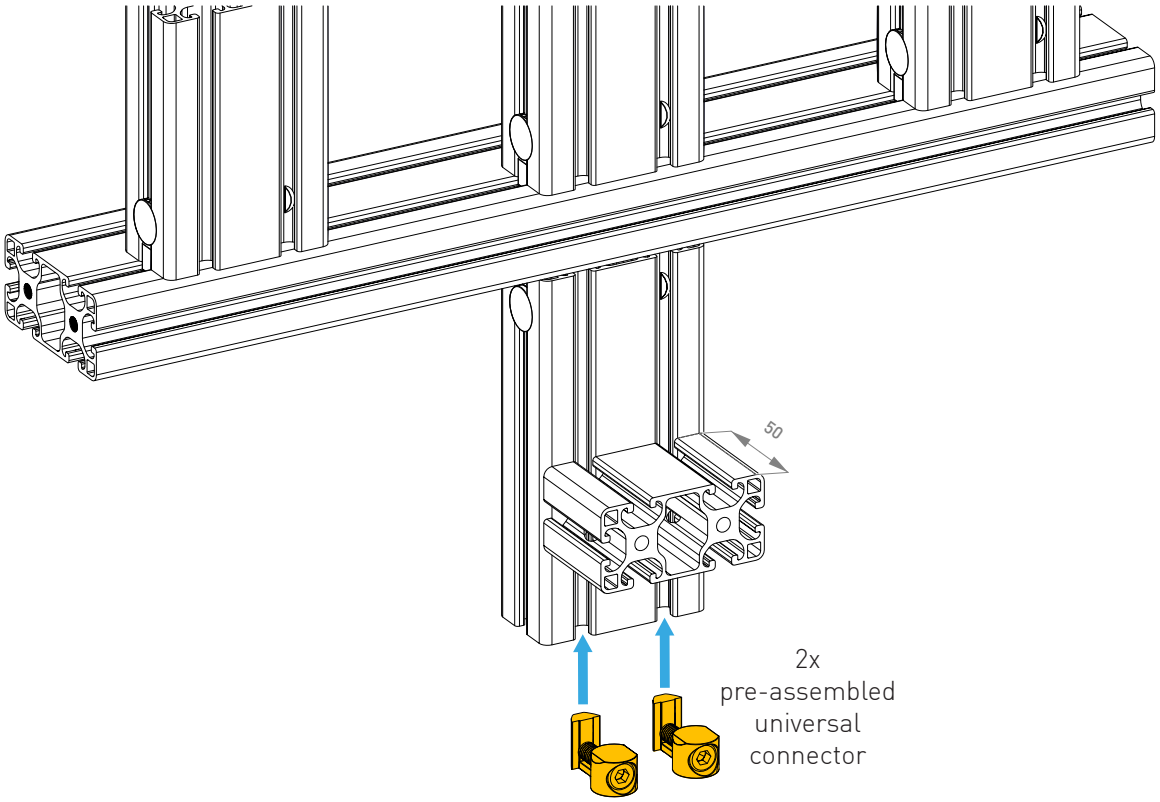
50
2x
pre-assembled
universal
connector

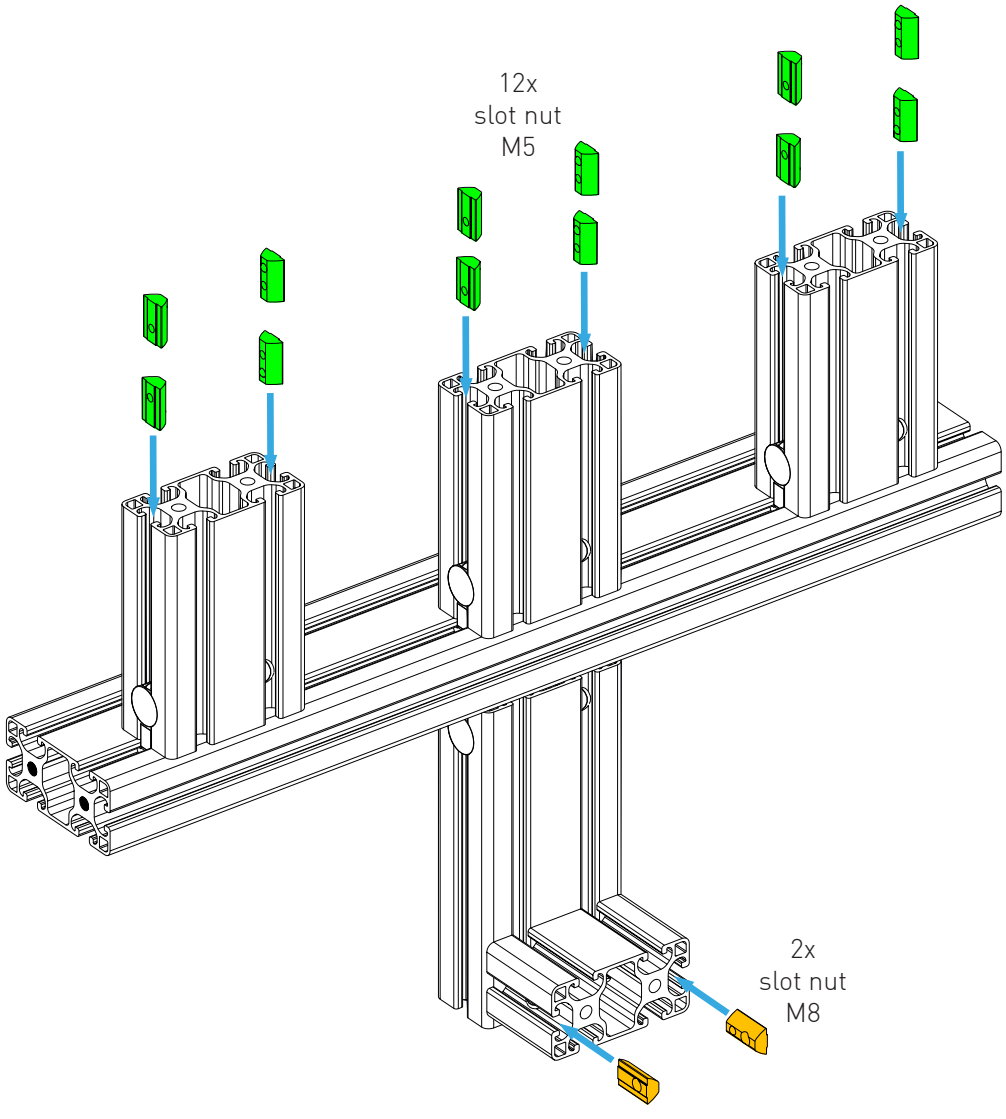
12x
slot nut
M5
2x
slot nut
M8

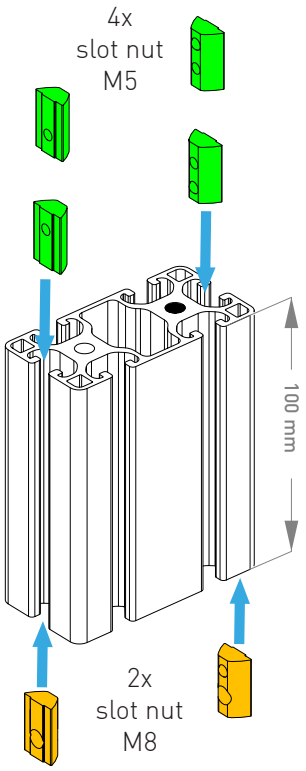
4x
slot nut
M5
100 mm
2x
slot nut
M8

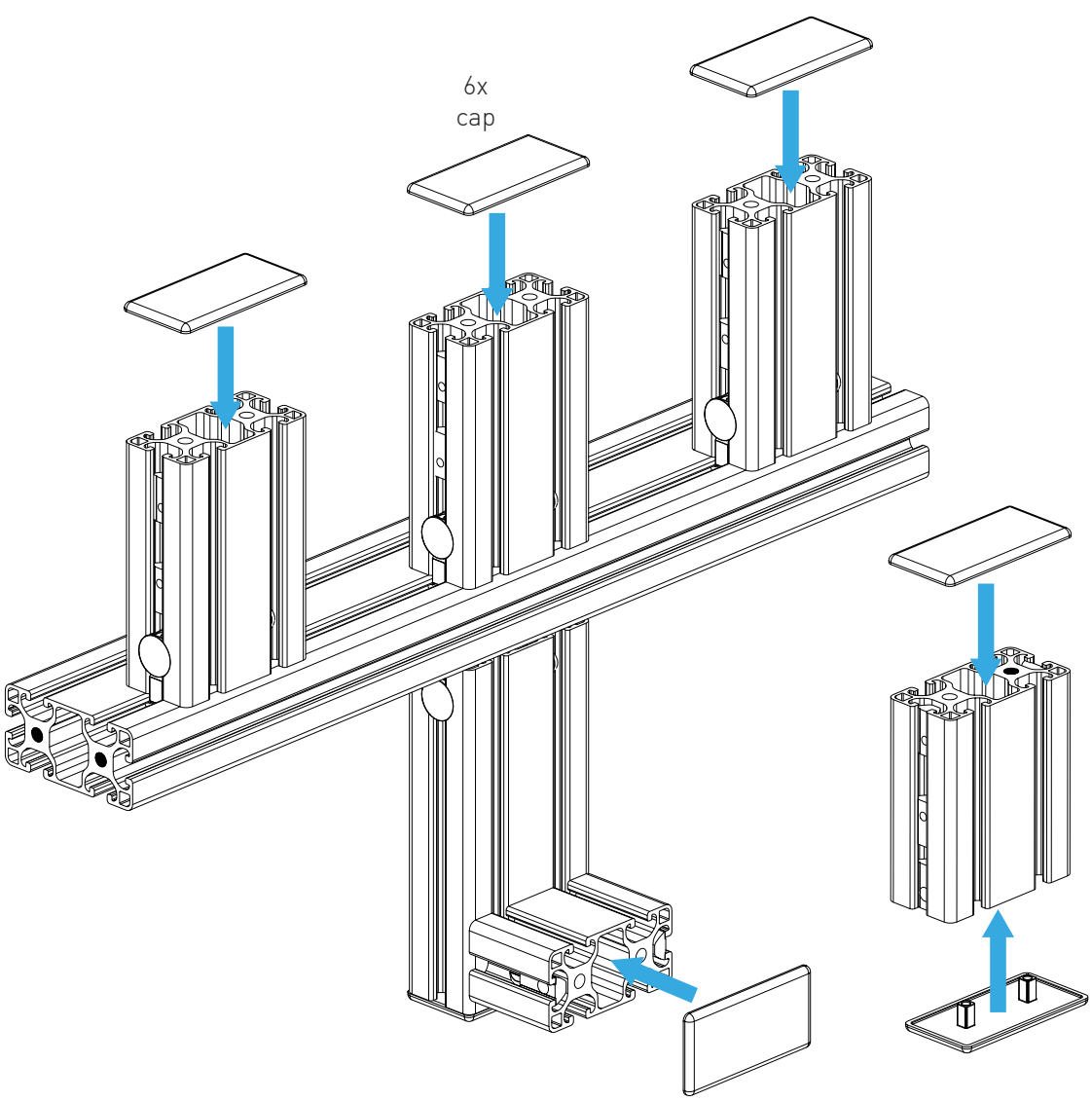
6x
cap

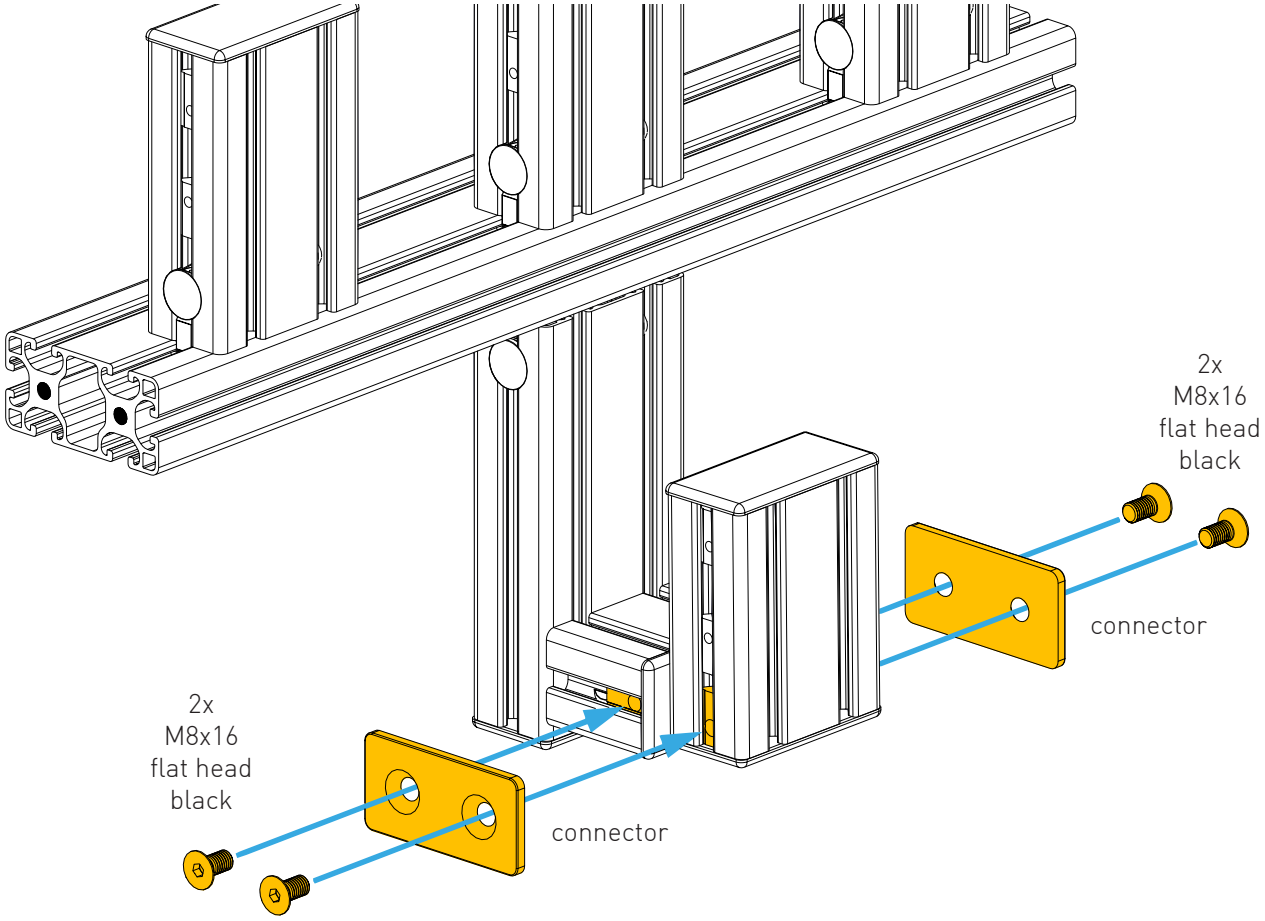
2x
M8x16
flat head
black
connector
2x
M8x16
flat head
black
connector

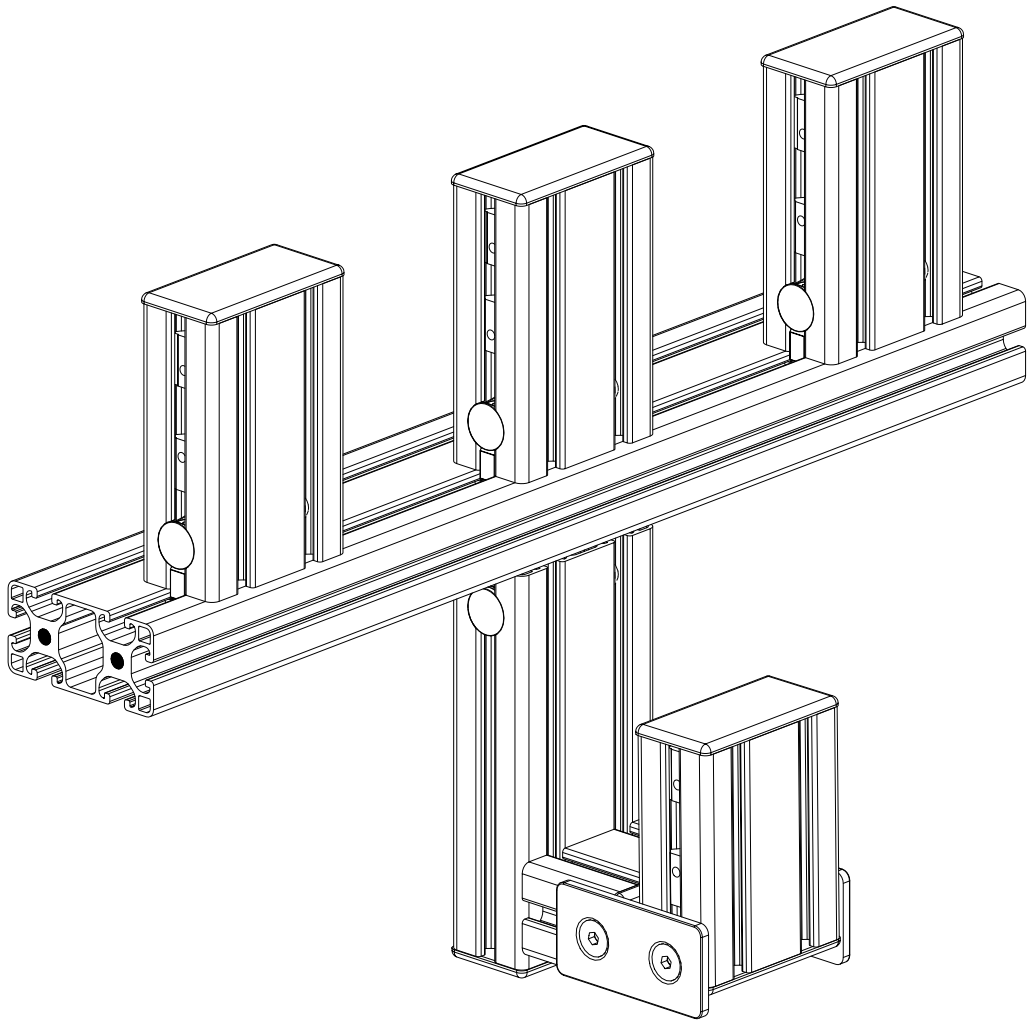

3x

Also observe the Winwing operating instructions!

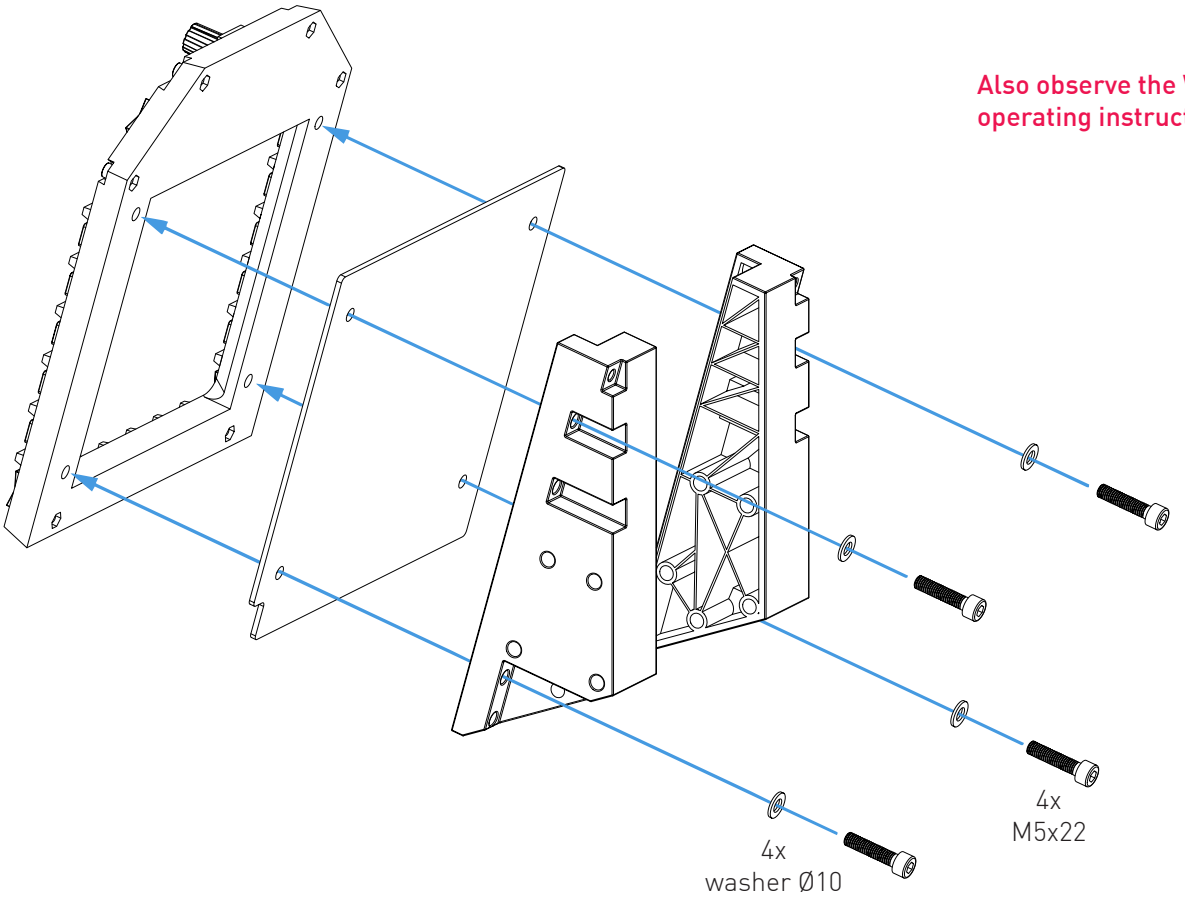

1x

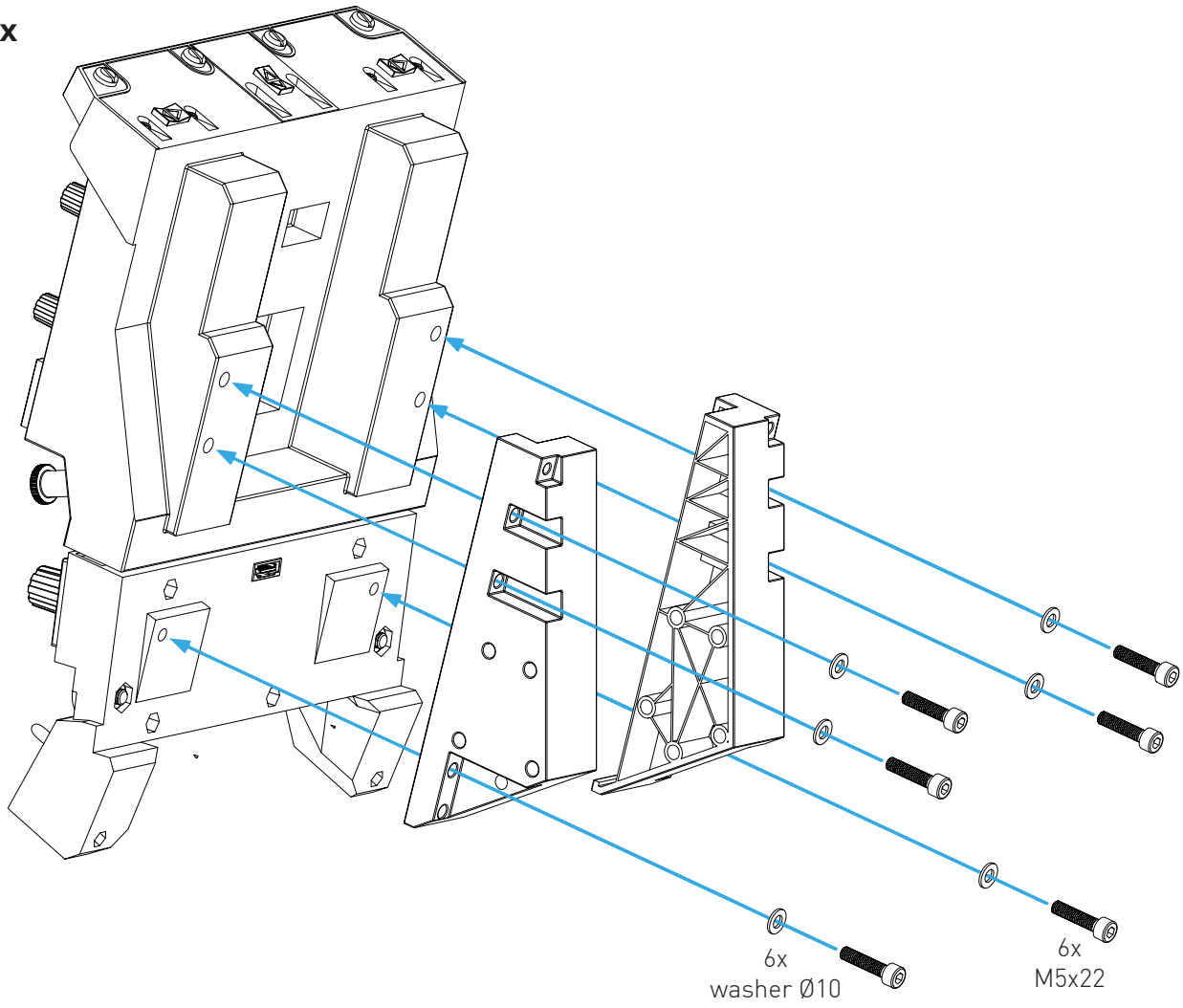

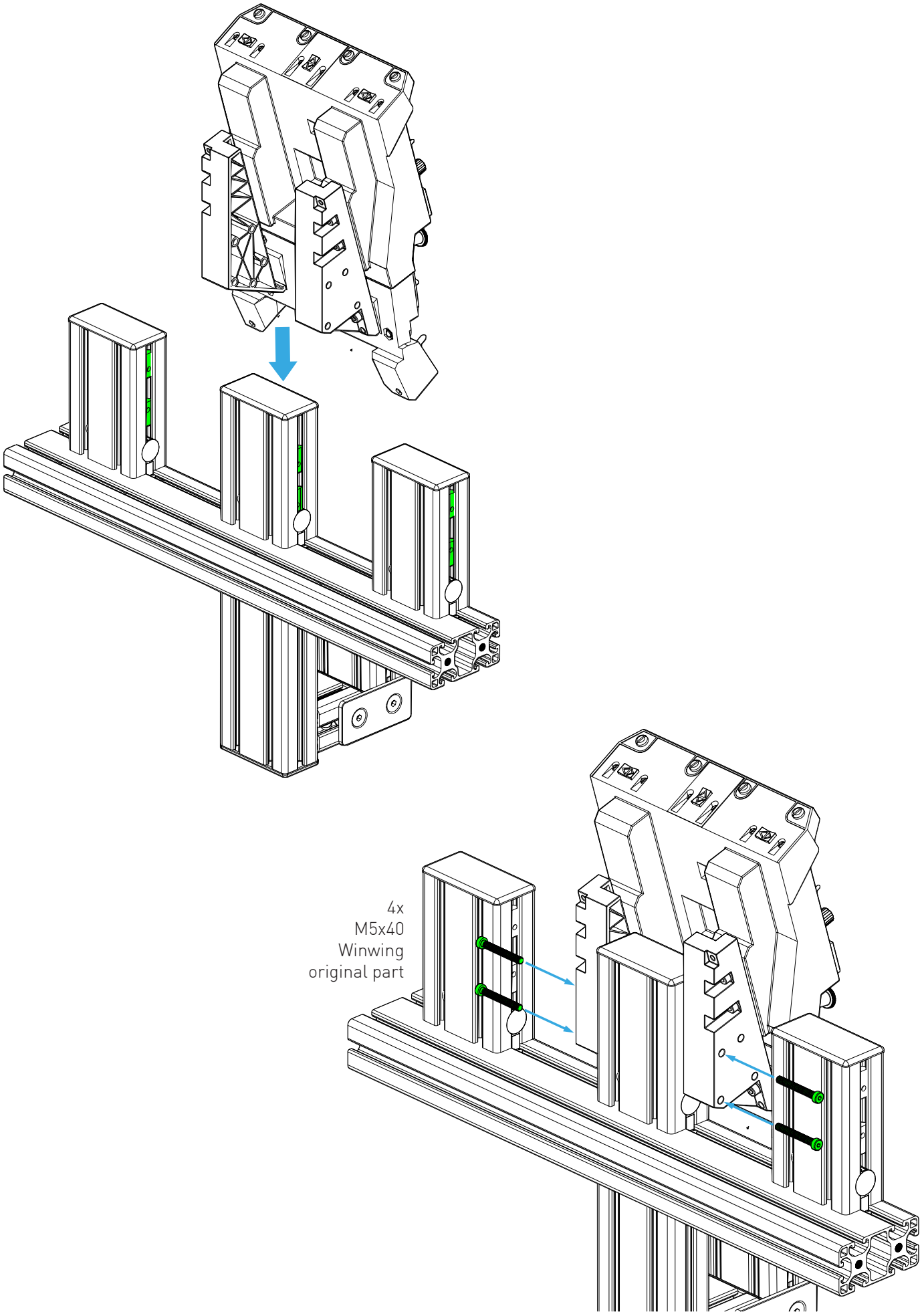
4x
M5x40
Winwing
original part

8x
M5x40
Winwing
original
part

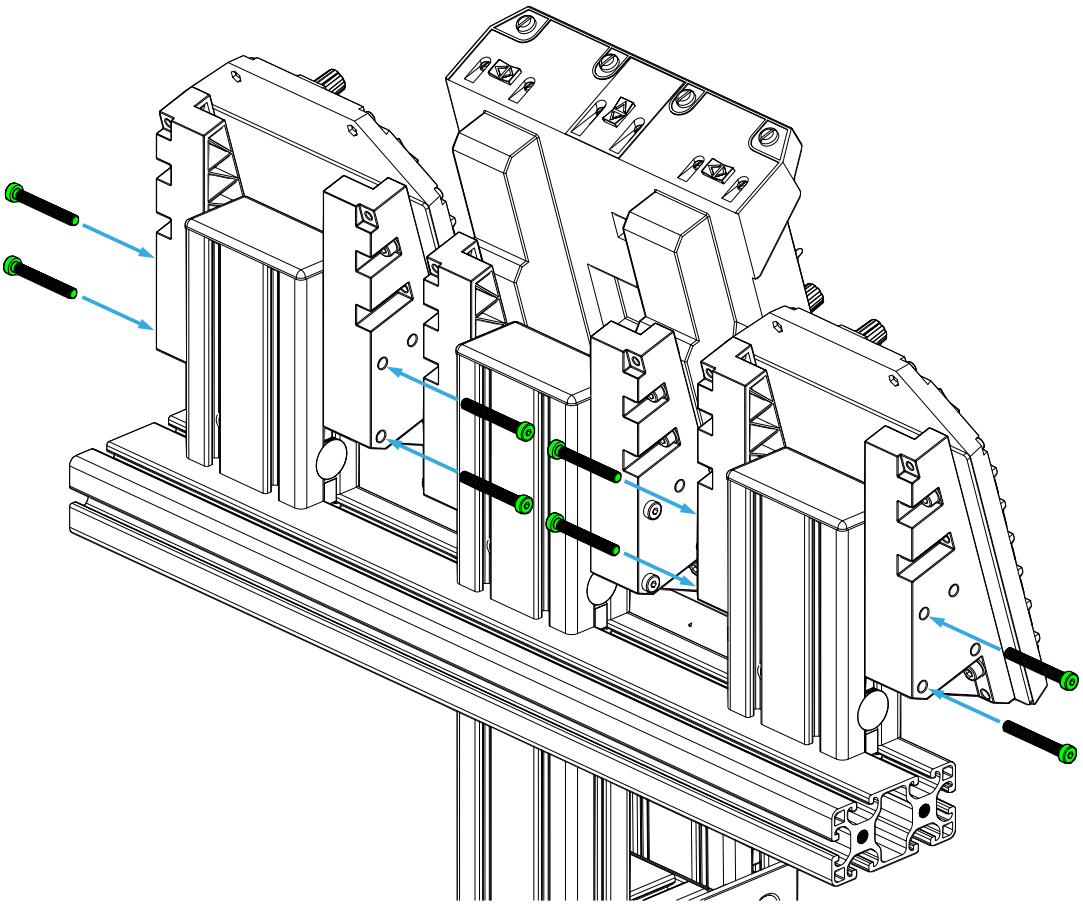

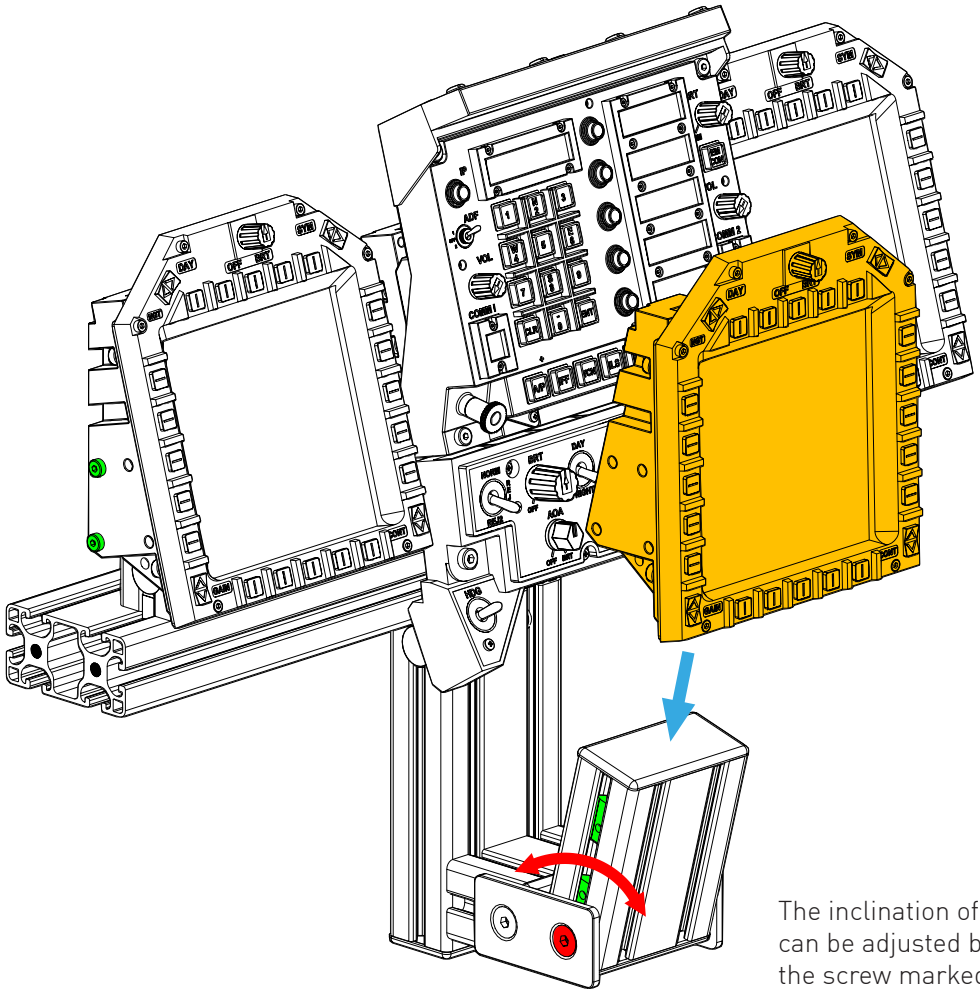

The inclination of the profile can be adjusted by loosening the screw marked in red.

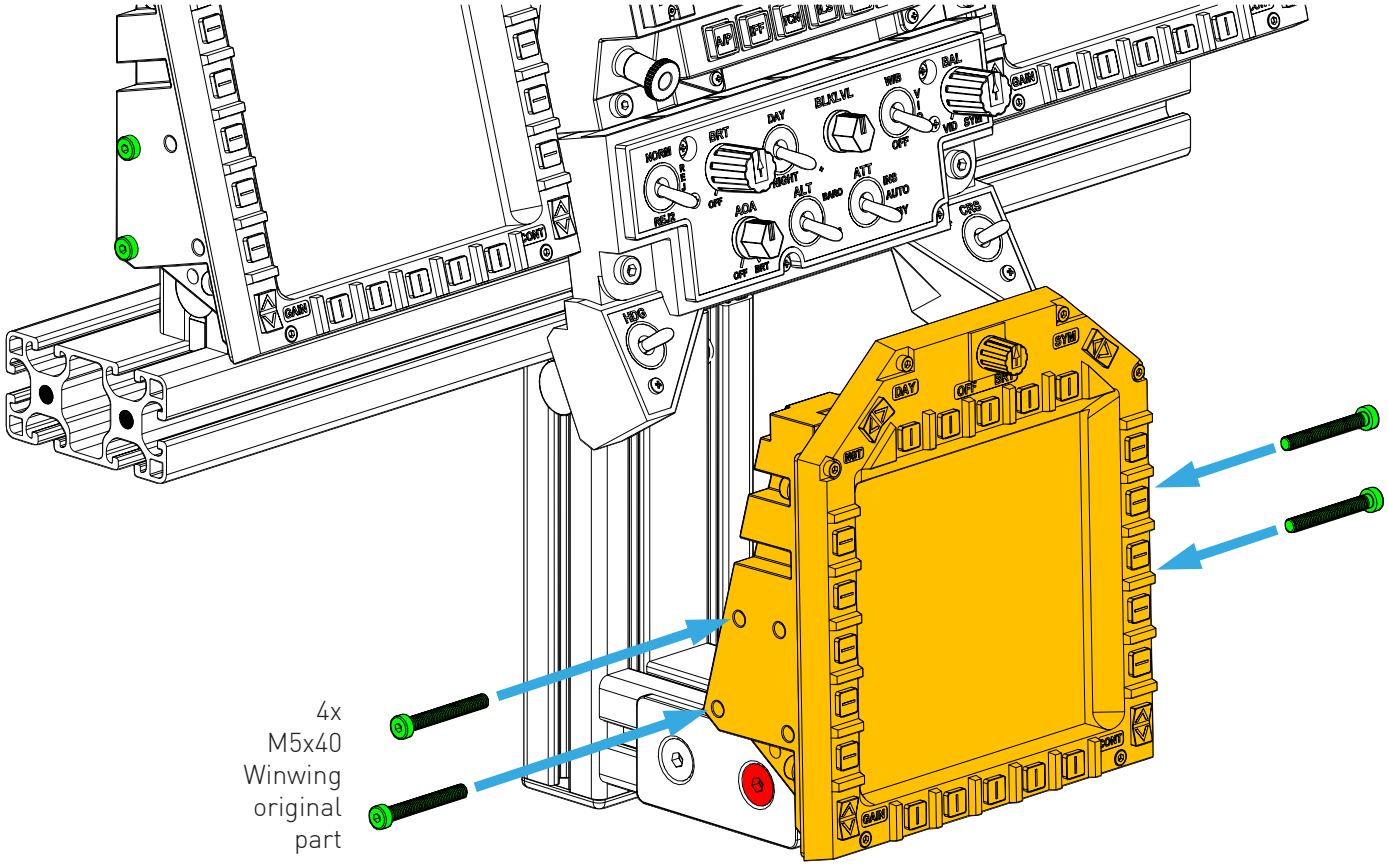
4x
M5x40
Winwing
original
part

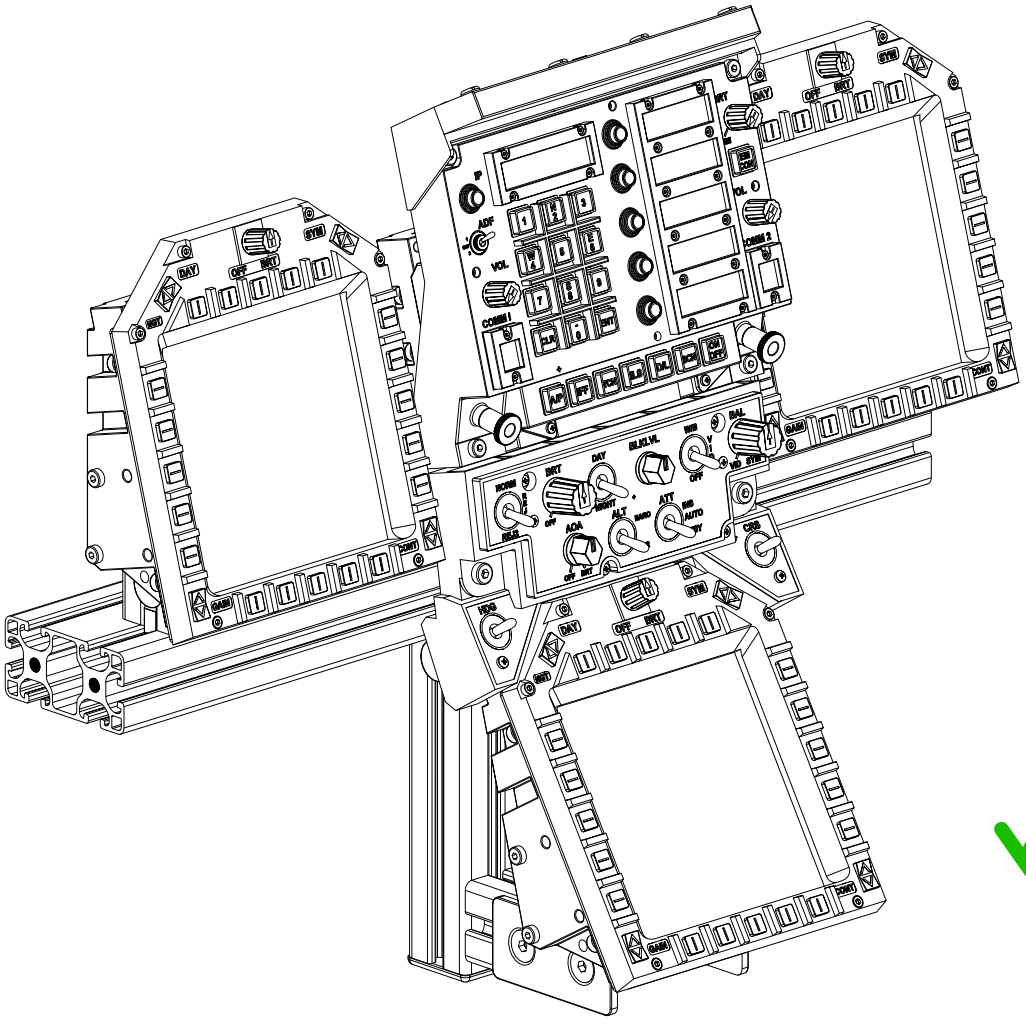

USUALLY PRE-ASSEMBLED

2x

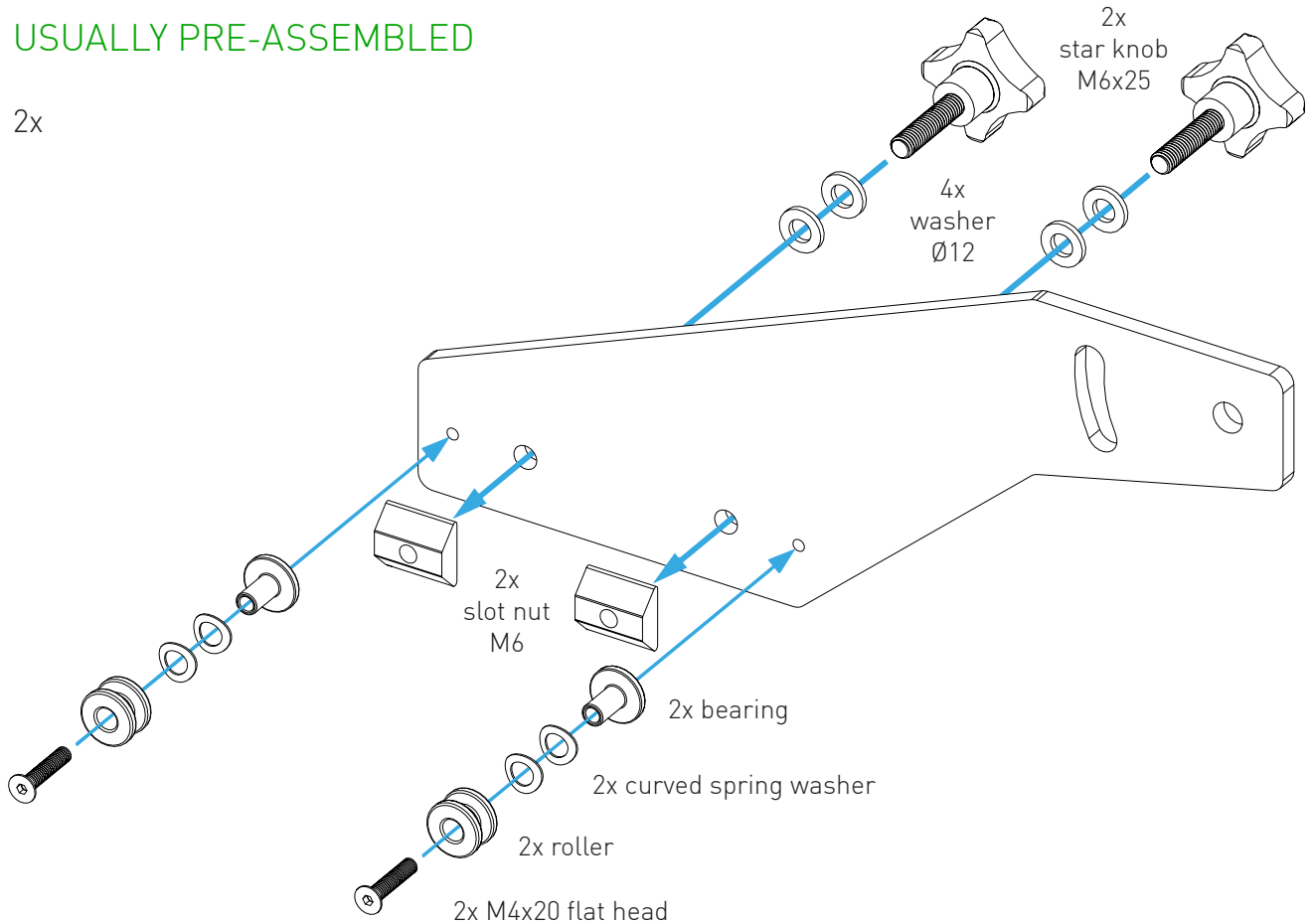

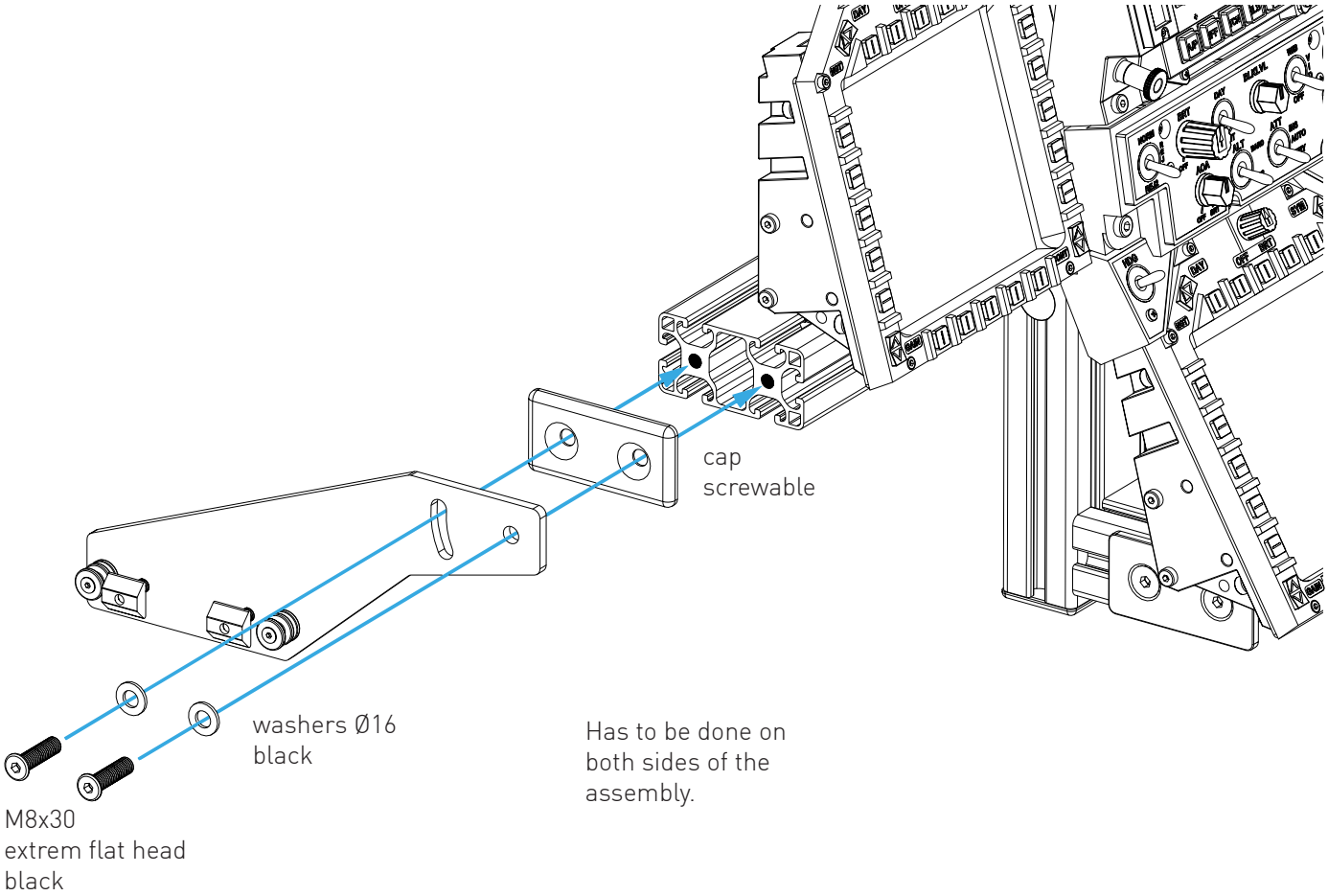

Has to be done on both sides of the assembly.

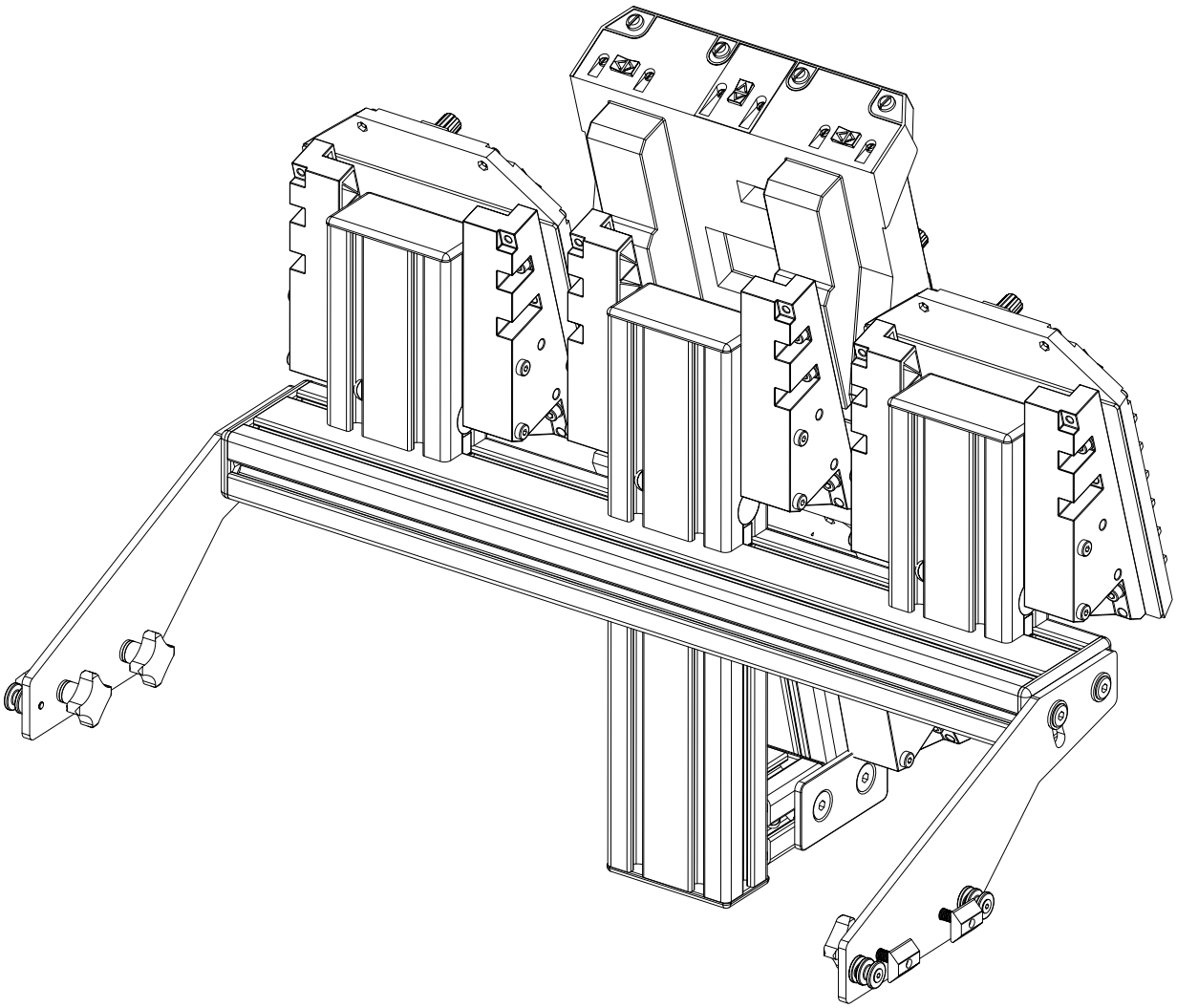

ASSEMBLY OF THE FRONT FRAME

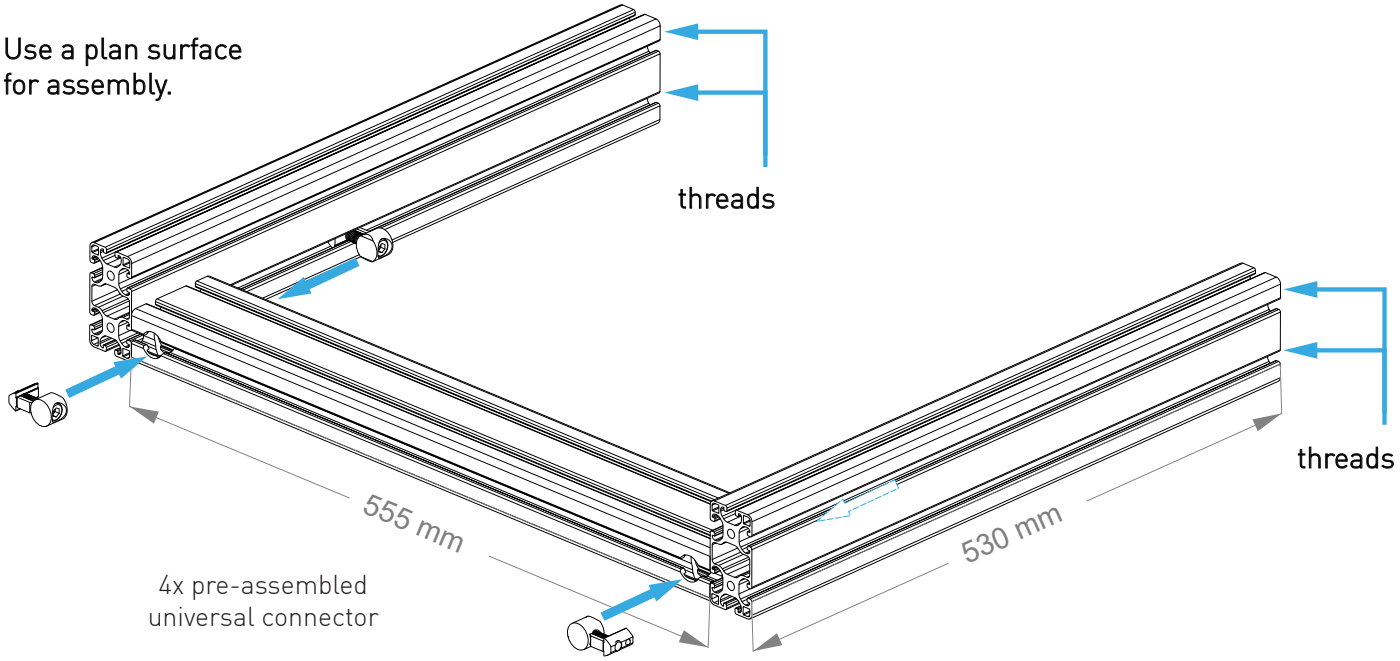

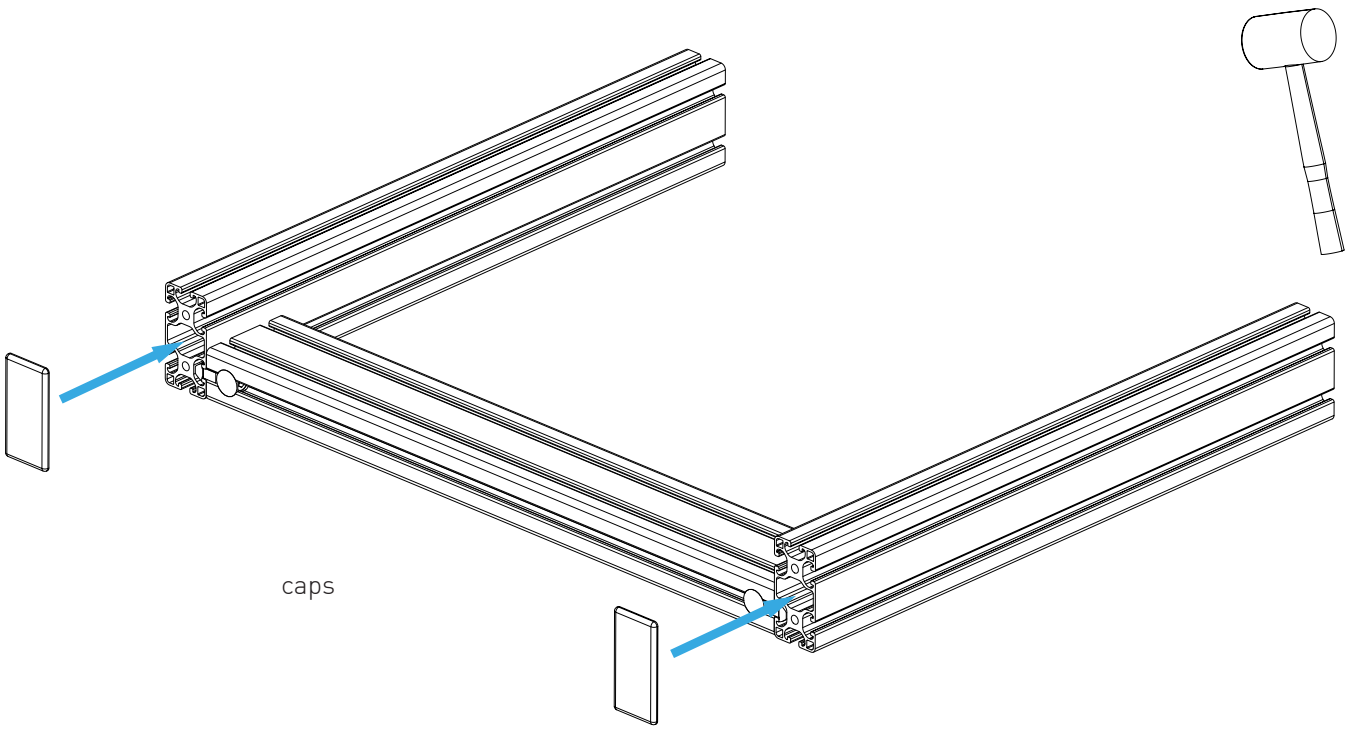

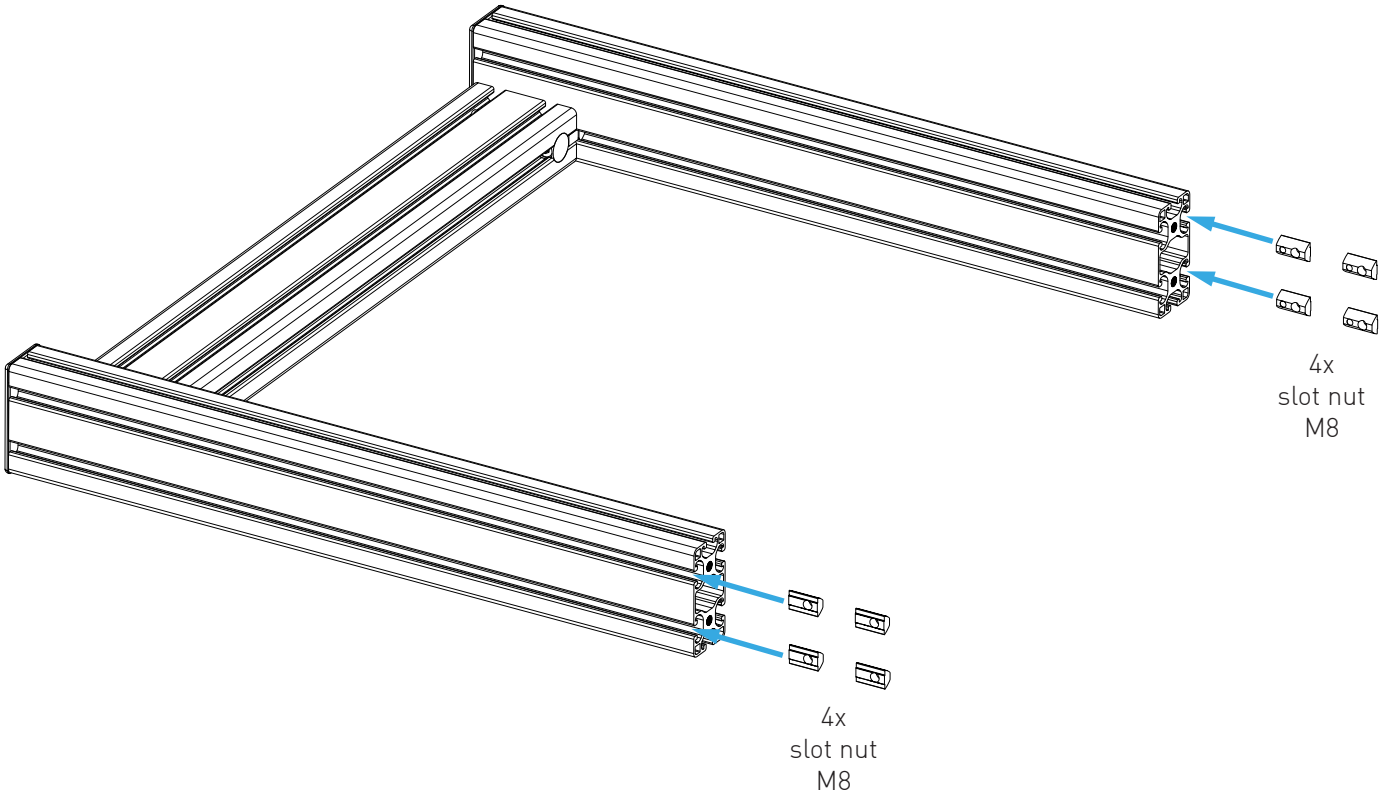

for both sides

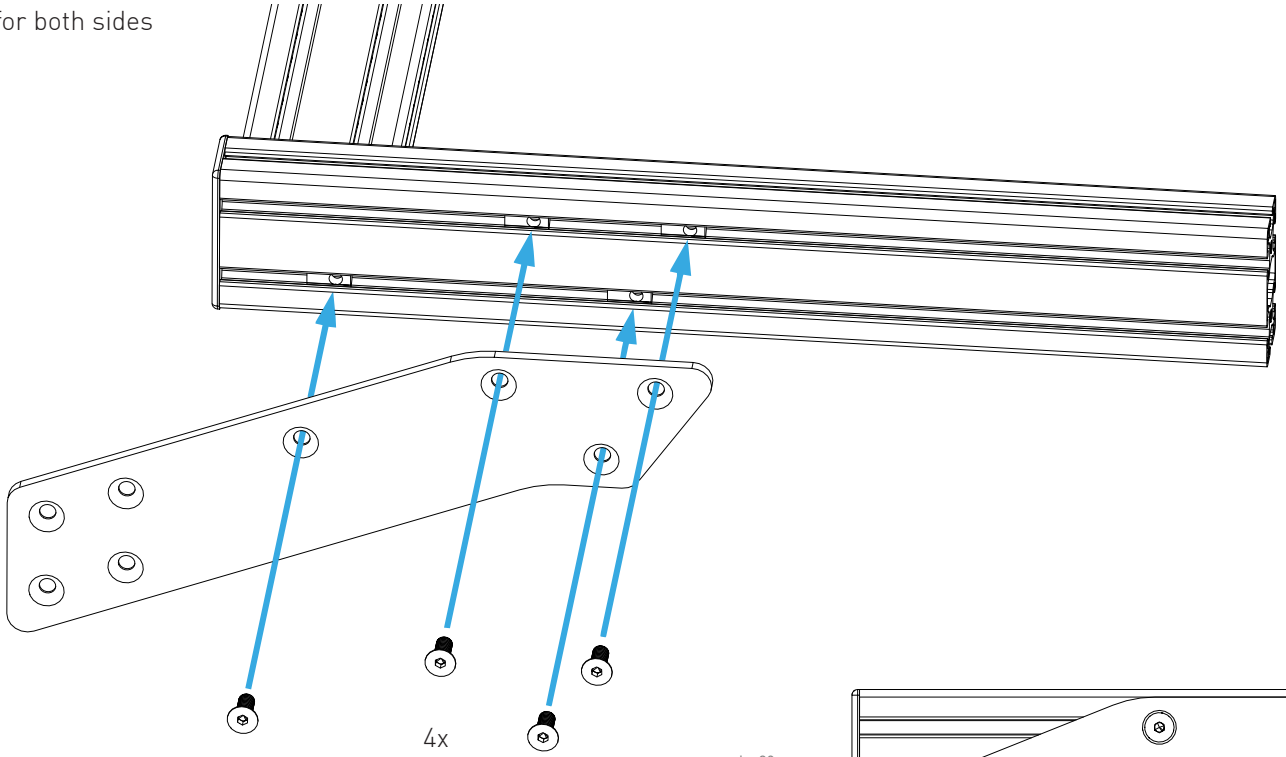

before 2024
(6mm thick plates)
4x M8x16
flat head, black

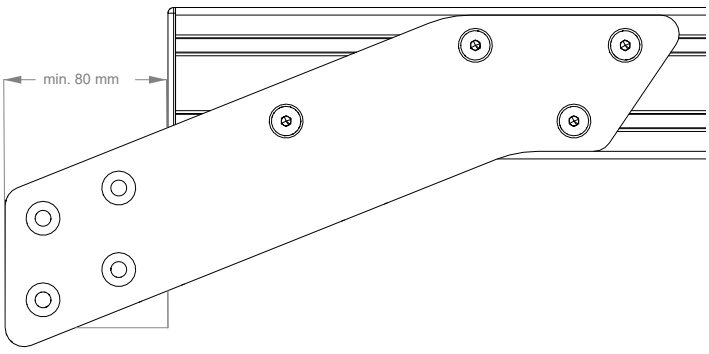

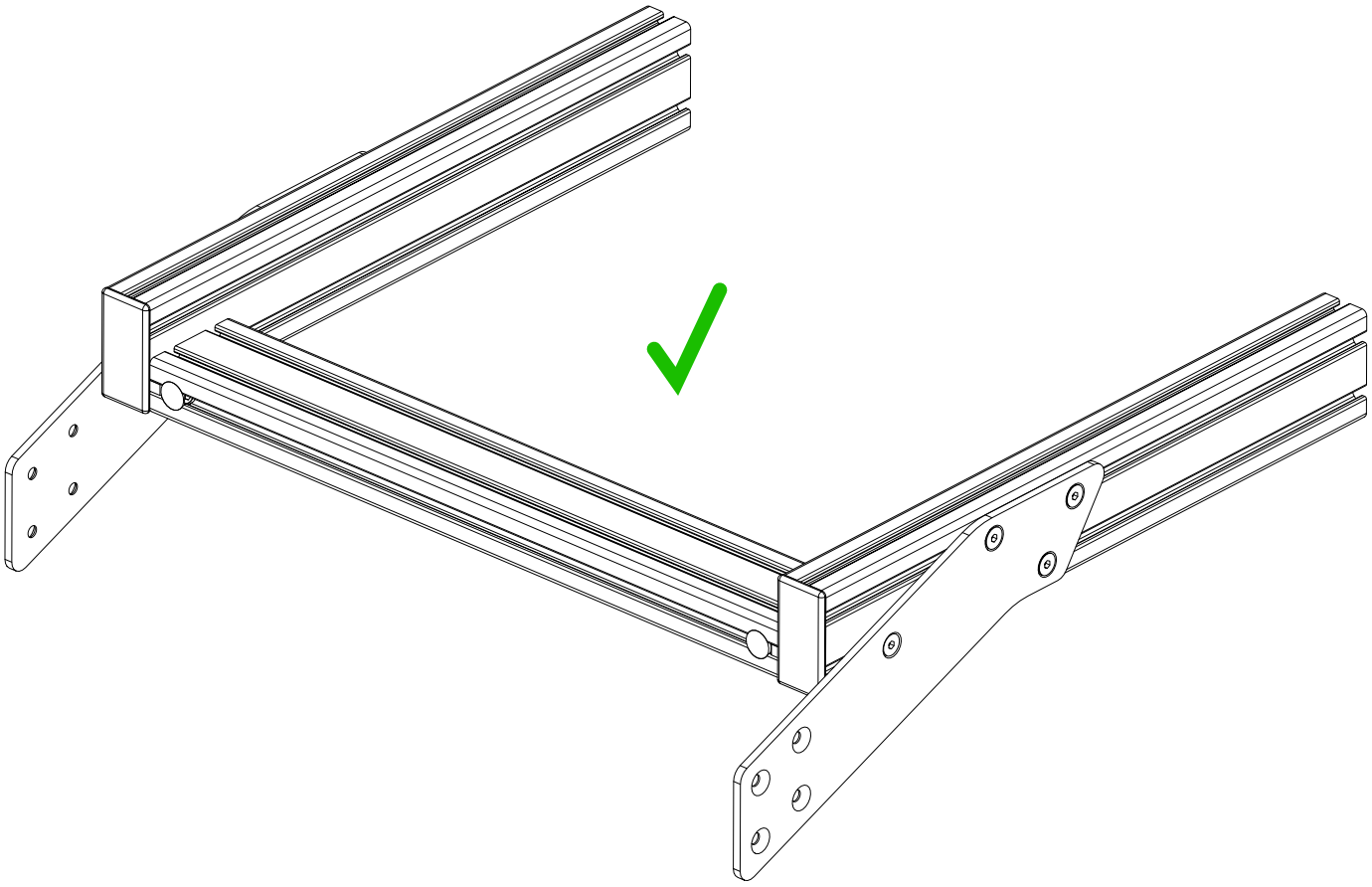

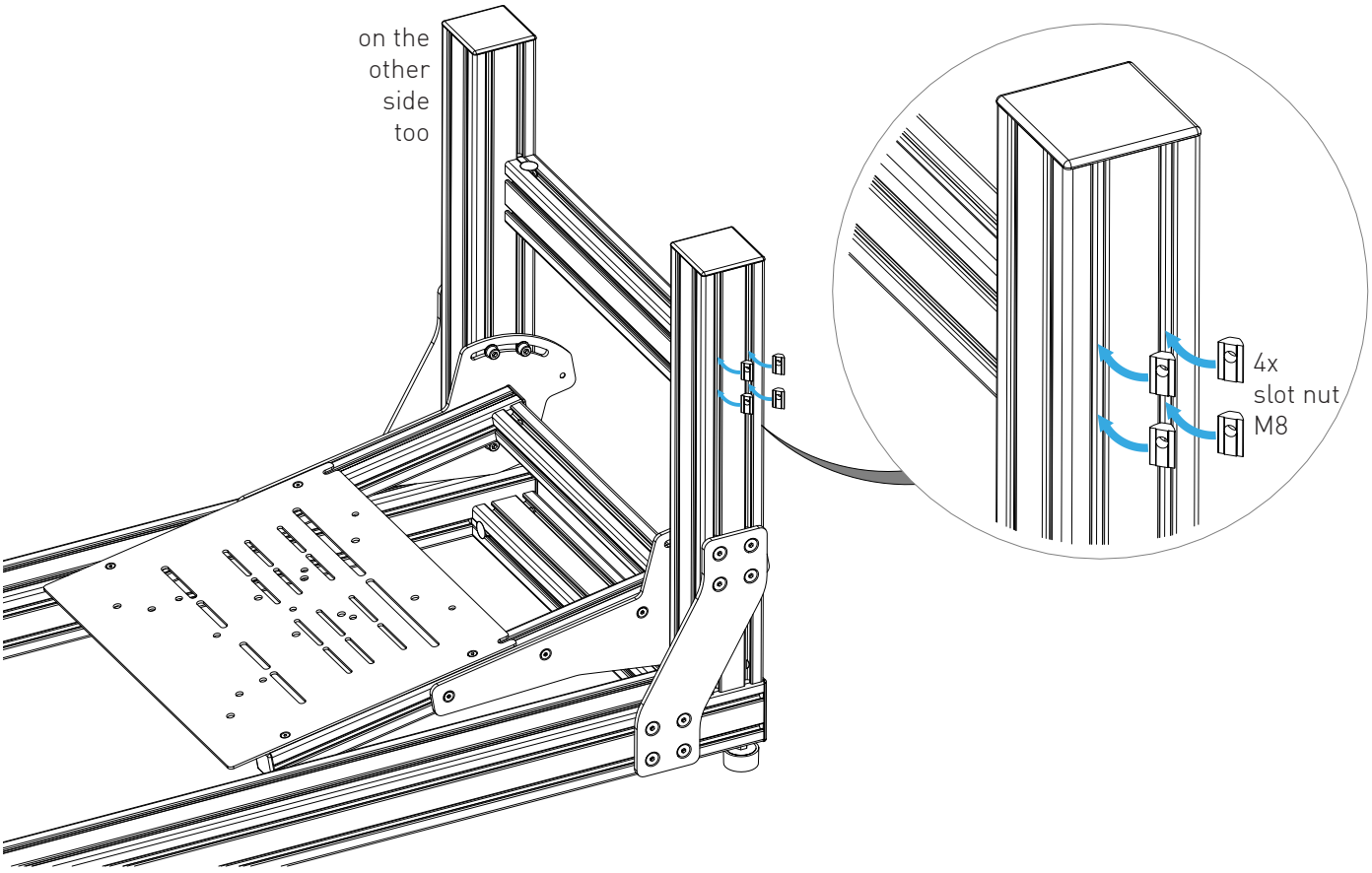

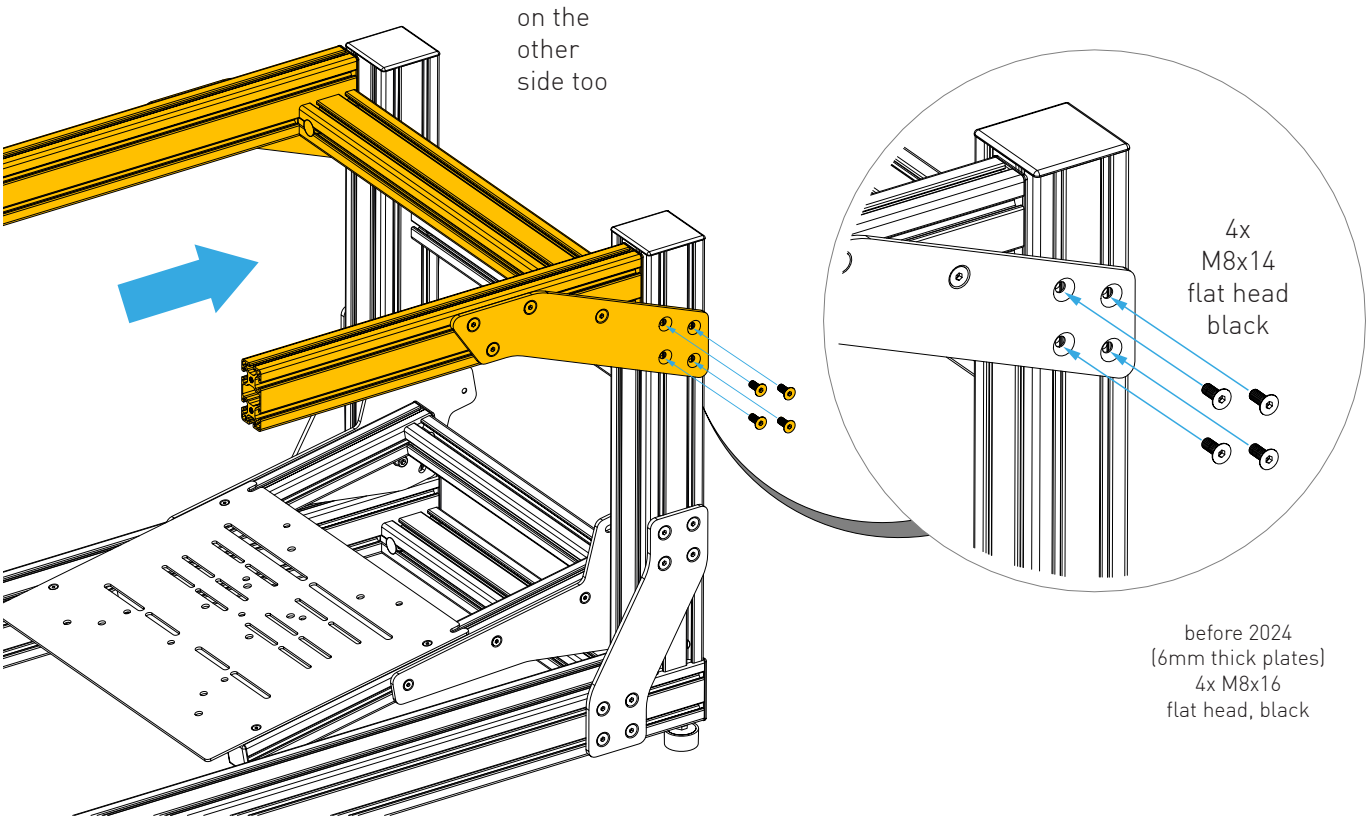

before 2024
(6mm thick plates)
4x M8x16
flat head, black

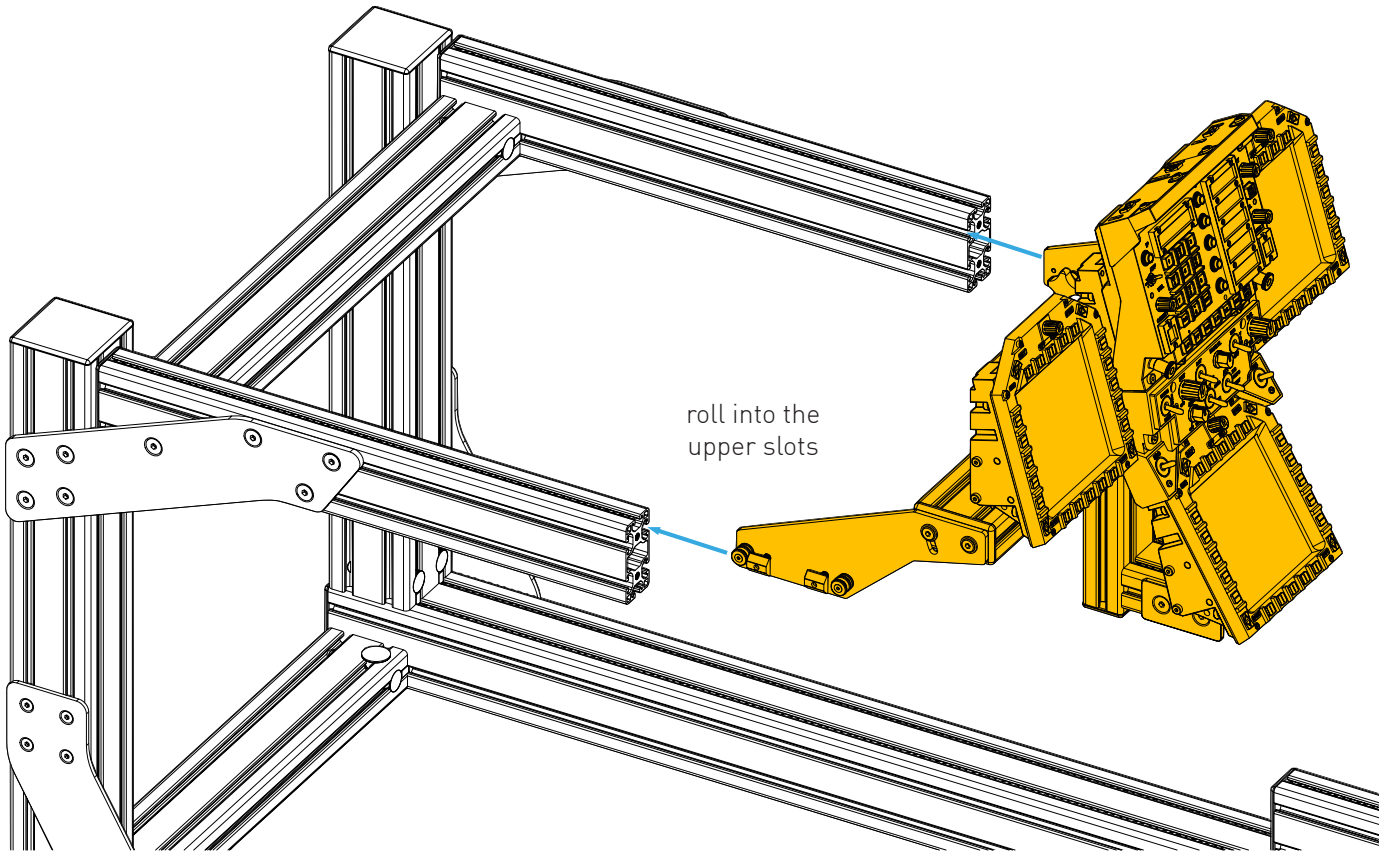

Detail view

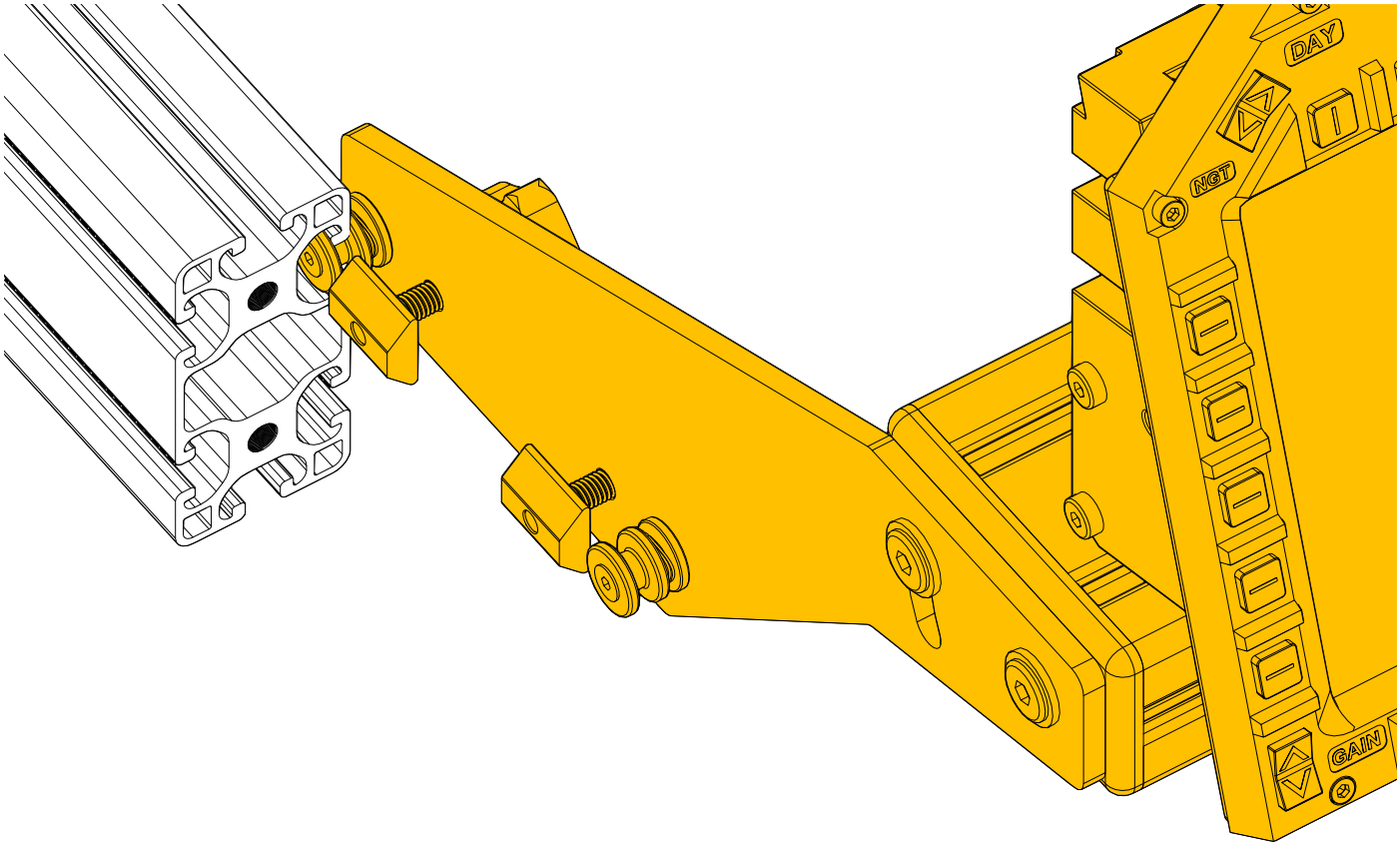

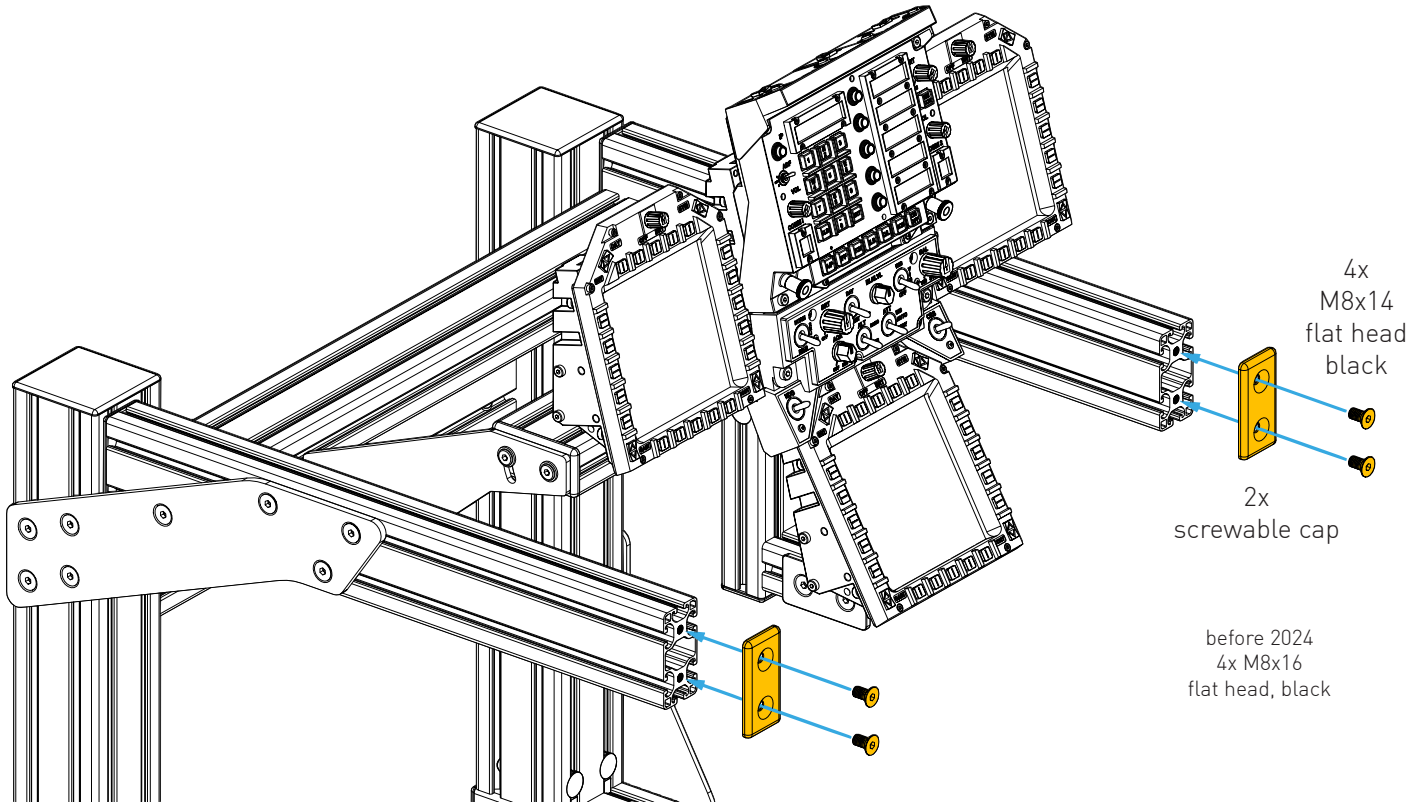

OPERATION

Loosen the red marked bolts on each side to adjust the height.

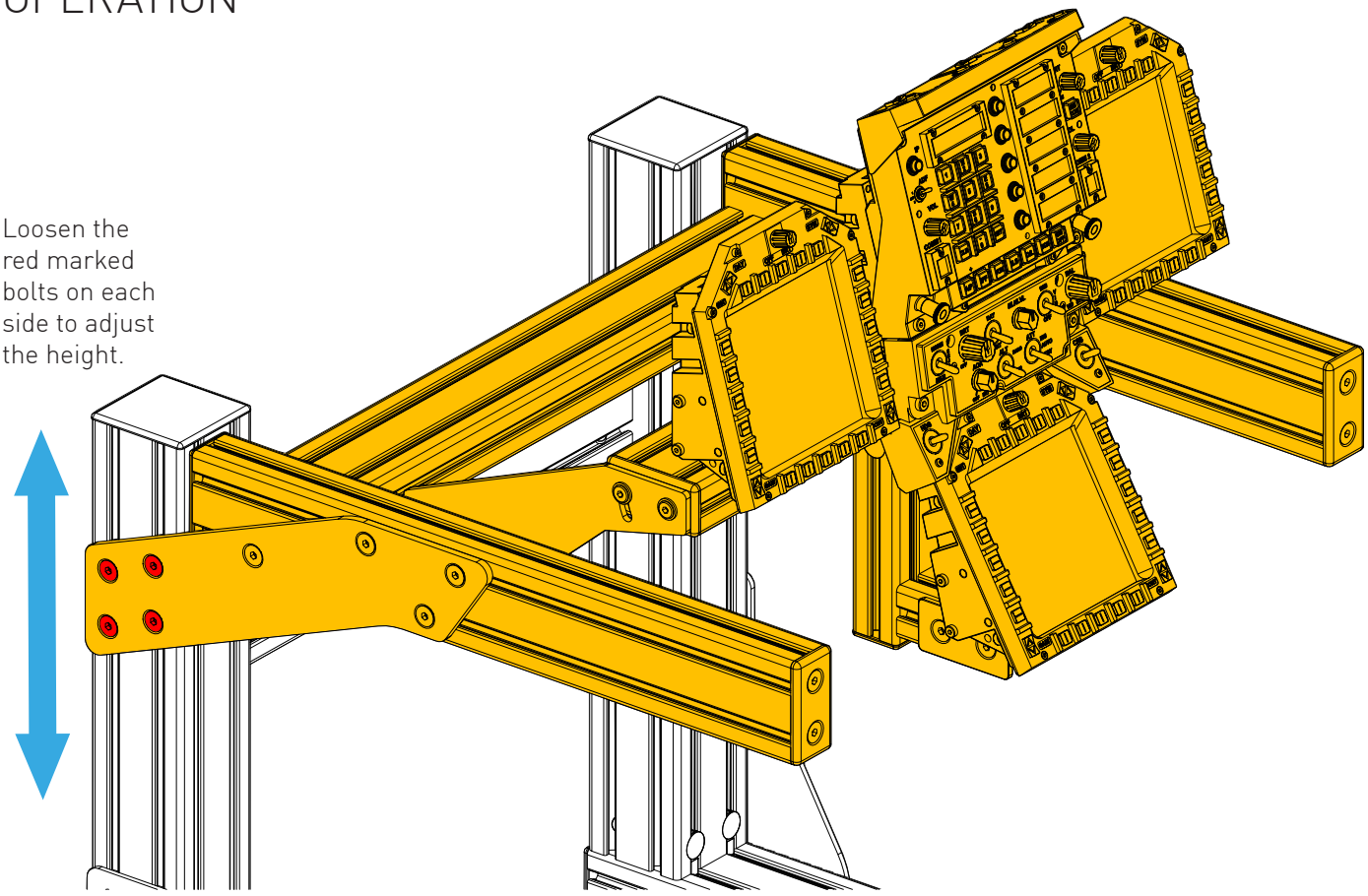

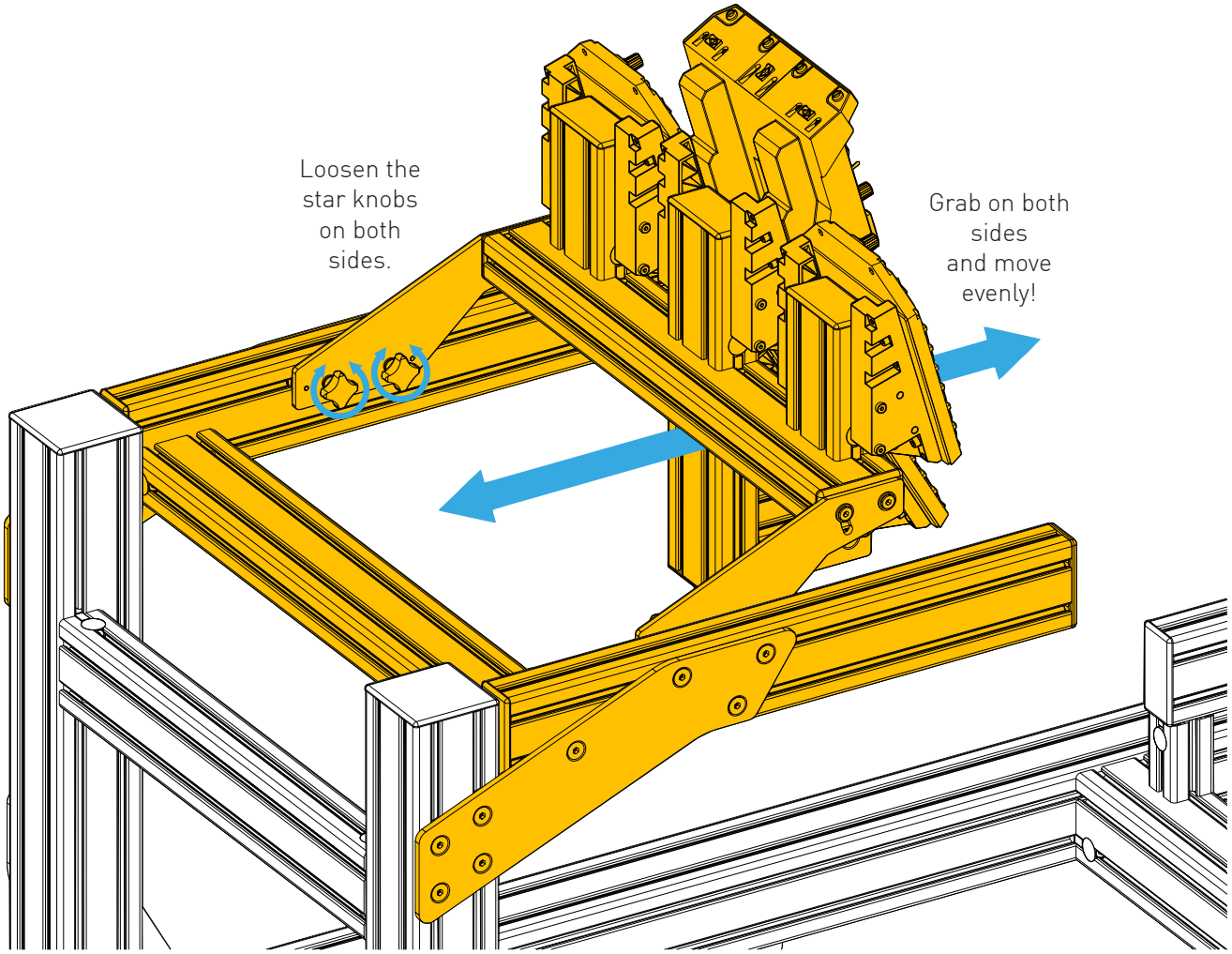
Loosen the star knobs on both sides.
Grab on both sides and move evenly!

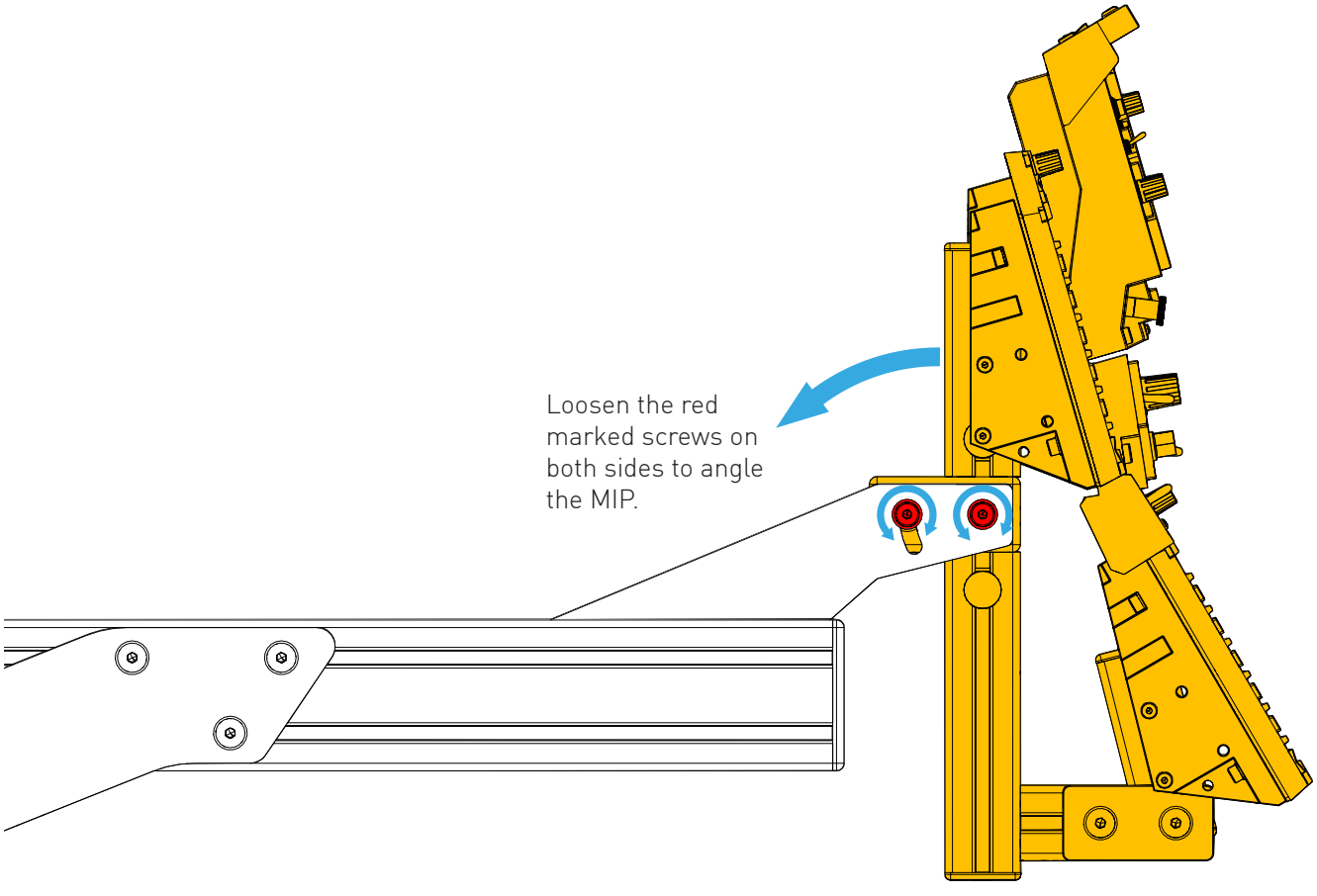
Loosen the red marked screws on both sides to angle the MIP.

12-01-2024